daitsu

INSTALLATION AND MAINTENANCE MANUAL

IM En

CASSETTE

Serie

FCSD(H)-V/P - AC MOTOR

Edition

R00

Models

FCSD-03/04-V
FCSD-06/08-V
FCSD-08R2-V
FCSD-09-V
FCSD-12/16-V
FCSD(H)-09/10/12-V
FCSD(H)-16/18/20-V
FCSD(H)-24-V
FCSD-06/08-P
FCSD-09-P
FCSD-12/16-P
FCSD(H)-09/10/12-P
FCSD(H)-16/18/20-P
FCSD(H)-24
FCSD-06/08-P
FCSD-09-P
FCSD-12/16-P
FCSD(H)-09/10/12-P
FCSD(H)-16/18/20-P
FCSD(H)-24

INVESTING IN QUALITY, RELIABILITY & PERFORMANCE

ISO 9001 QUALITY

Management Service

Every product is manufactured to meet the stringent requirements of the internationally recognized ISO 9001 standard for quality assurance in design, development and production.

CE SAFETY STANDARDS

Product Service

All products conform to the Certificate Europe directives (Machinery Safety, Electromagnetic Compatibility and Low Voltage), as required throughout the European Community, to guarantee correct standards of safety.

EUROVENT CERTIFICATION

WEEE MARK

All products conform to the "**WEEE**" directive to guarantee correct standards of environmental solutions.

World Leading Design and Technology

Equipped with the latest air-conditioning test rooms and manufacturing technology, we produce over 50,000 fan coil units each year, all conforming to the highest international standards of quality and safety.

The Highest Standards of Manufacturing

In order to guarantee the very highest standards and performance, we manage every stage in the manufacturing of our products. Throughout the production process we maintain strict control, starting with our extensive resources in research and development through to the design and manufacture of almost every individual component, from molded plastics to the assembly of units and controllers.

Quality Controlled from Start to Finish

Our highly trained staff and strict quality control methods enable us to produce products with an exceptional reputation for reliability and efficiency, maintained over many years. As well as CE certification and ISO 9001, several products ranges have UL / ETL safety approval in the USA and Canada, Eurovent performance and sound certification as well as ROHS compliance for Europe, giving you the confidence of knowing our company is the right choice when selecting fan coil units.

ALWAYS MAKE SURE THIS MANUAL REMAINS WITH THE UNIT. READ THIS MANUAL BEFORE PERFORMING ANY OPERATION ON THE UNIT.

Table of Contents

A. Technical Data 5

A.1. *General Description 5*
A.2. *General Specifications 6*

A.2.1. 2-Pipe Systems 6
A.2.2. 4-Pipe Systems 9

A.3. *Coil Data 10*

A.3.1. 2-Pipe Systems 10
A.3.2. 4-Pipe Systems 10

A.4. *Dimensional Drawings 11*
A.5. *Sound power data 15*
A.6. *Valve Information (Optional Part) 18*

B. Installation 20

B.1. *Safety Precautions 20*
B.2. *Standard Configurations and Accessories 21*
B.3. *Operating Limits 22*
B.4. *Before Installation 22*
B.5. *Installation Location 23*
B.6. *False Ceiling Clearance 23*
B.7. *Condensate Drainage Connection 24*
B.8. *External Drain Pan Installation 24*
B.9. *Water Connections and Valve Configurations 25*
B.10. *Fresh Air Renewal Connection 26*
B.11. *Branch Duct Connection (optional part) 28*
B.12. *Suspension Bolts Layout and Ceiling Opening 29*
B.13. *Interconnecting Wiring 34*
B.14. *Mounting Front Panel Assembly 35*
B.15. *Start-Up 35*

C. Maintenance 36

C.1. *For Units Out Of Use for Extended Period 36*
C.2. *Extra Maintenance 36*
C.3. *Filter Removal 36*
C.4. *Air Vent and Water Purge Valve 37*
C.5. *Fan Speed Customization 37*
C.6. *Motor and Fan Blower Replacement 38*
C.7. *Condensate Pump Kit Replacement 39*
C.8. *Control Box Replacement 39*
C.9. *Electric Heater Installation 40*
C.10. *Transformer (optional) Installation 40*

D. Control Specifications: Complete Function PCB - S Control 41

D.1. *I/O Port Definitions 41*
D.2. *Wiring Diagrams 42*

D.2.1. Standard AC-S1 Control PCB 42
D.2.2. Master Slave Networking Wiring Diagram 43

D.3. *Configuration Settings 44*
D.4. *Control Logic For 2-Pipe System 46*

D.4.1. With Valve Configuration 46
D.4.2. Without Valve Configuration 49

D.5. *Control Logic For 4-Pipe System 51*
D.6. *Sleep Mode 53*
D.7. *Auto Fan Speed 53*
D.8. *Louver 54*
D.9. *Buzzer 54*

D.10. *Auto Restart* *54*
D.11. *On/Off Switch On LED Panel* *54*
D.12. *Drain Pump* *55*
D.13. *Float Switch* *55*
D.14. *Electric Heater Safety Switch* *55*
D.15. *Low Temperature Protection of Indoor Coil in Winter* *55*
D.16. *LED Display and Error Description* *57*
D.17. *LED Display on Master/Slave Connection* *58*

E. Networking System 59

E.1. *Master-Slave Network* *59*

E.1.1. Master Control Unit Settings 59
E.1.2. Master-Slave Network Setup 60
E.1.3. Master-Slave Communication Method 62

E.2. *Open Modbus protocol* *63*

F. Control Specifications: Flexible Function PCB - W Control 66

F.1. *Features* *66*
F.2. *I/O Port Definitions* *66*
F.3. *Wiring Diagrams* *67*

F.3.1. Standard W Control PCB 67

F.4. *AC-W PCB Control Logic Specifications* *68*

F.4.1. Unit Power ON/OFF 68
F.4.2. Alarm Protection and Error Display 68
F.4.3. Drain Pump Operation 68
F.4.4. Louver Control 68
F.4.5. Low Temperature Protection of Indoor Coil in Winter 68

F.5. *LED Display and Error Description* *69*

G. User Interface 70

G.1. *Remote Handset* *70*
G.2. *Wired Wall Pad Controller* *71*

H. Sensor Resistance R-T Conversion Table 75
I. Troubleshooting 77

Model Code Nomenclature

FCSD - 04 - V S

S	Complete function on board PCB with integrated group control functionality.
W	Flexible function on board PCB with drain pump, louver and zone control functionality.
X	No control box pre-installed.

P	Chilled/Hot Water, 4-Pipe
V	Chilled/Hot Water, 2-Pipe
VEH	Chilled Water, 2-Pipe with Electric Heater

03 - 16	Unit Sizes. See General Specification section A for cooling and heating capacities

FCSD	Hydronic Cassette G Series

FCSD(H) - 12 - V S

S	Complete function on board PCB with integrated group control functionality.
W	Flexible function on board PCB with drain pump, louver and zone control functionality.
X	No control box pre-installed.

P	Chilled/Hot Water, 4-Pipe
V	Chilled/Hot Water, 2-Pipe
VEH	Chilled Water, 2-Pipe with Electric Heater

09 - 20	Unit Sizes. See General Specification section A for cooling and heating capacities

FCSD(H)	Hydronic Cassette H Series

A. Technical Data

A.1. General Description

The Ceiling cassette units make each served area an independent controlled temperature zone to suit diverse requirements.

Construction
Cases are constructed of galvanized sheet steel with integral fan mounting rails for added strength. Fire resistant insulation is fitted internally to provide both thermal and acoustic insulation. The RAL9010 fascia is constructed of high-impact polystyrene.

Coils
Constructed with seamless copper tubes and headers. The tubes are mechanically expanded into corrugated aluminum fin material for a permanent primary to secondary surface bond. Coils are tested at 25 bar and recommended for operating at 16 bar. Coils include manual air vent and water purge valve.

Fan
The backward-curved centrifugal fan is statically and dynamically balanced for quiet operation. Fan impellers are made from fire-retardant plastic for lightweight and corrosion-resistant operation.

AC motor
Standard motors are PSC, permanently lubricated type with internal thermal overload protection. The unit is using 5-speed AC motor which can be set on the site after removing front panel.

Filtration
Reusable wire framed filters are fitted and may be vacuum cleaned. G4 efficiency filter is as optional.

Condensate pump
A condensate pump is fitted to carry water out of the unit. The pump is fixed to a mounting bracket. The pump can be withdrawn from the bottom after removing the front panel. A float switch is fitted to stop the cooling action, should the pump become blocked or fail.

Louver
Louver vanes are manufactured from ABS to prevent condensation from forming, automatic adjustable and driven by stepping motors on unit.

Fresh air
The fresh air system for cassette unit allows up to 15% of unit airflow (maximum air flow per connection is 100m^3/h) as fresh air intake (per connection). Maximum 2 fresh air connections per unit are allowed.

Microprocessor control (S type)
The PCB (printed circuit board) microprocessor control board relays control the operation of the indoor-fan motor, ON/OFF water valves and electric heater (if fitted), to maintain room conditions at a user-defined set point. Temperature settings, fan speeds and other control functions can be changed by the infrared handset or wired wall pad.

Electro-mechanical control (W type)
A 230VAC signal from the thermostat which working power is from L and N or from indoor room to terminal H/M/L supplies power to the PCB. When H (H/M/L) is powered ON, the stepping motor is working and open the louver at maximum position. When H (H/M/L) is powered OFF, the stepping motor will close the louver. The condensate pump will run continuously, as long as coil temperature is less than 15°C. Alarm notification and zone control function are available. 40VA 24VAC transformer is equipped with unit optionally, which is used to supply 24VAC power to thermostat and modulating valve.

A.2. General Specifications

A.2.1. 2-Pipe Systems

Product range: FCSD Flexi Hydronic Cassette
FCSD-V~ Hydronic Cassette 2-pipe with AC motor

		FCSD-[Size]-V~			FCSD-03	FCSD-04	FCSD-06	FCSD-08
Unit Configuration		Configuration			2-pipe			
		Number Of Fan Blowers			Single			
		Power Supply		(V/Ph/Hz)	230 / 1 / 50 220 / 1 / 60			
		Operation Control - FCSD(H)			~S: Complete function onboard PCB with integrated group control functionality. ~W: Flexible function onboard PCB with drain pump, louver and zone control functionality. ~X: No control box pre-installed.			
Performance Data	Air	Air Flow	H	m³/hr	380	575	722	810
			M		240	290	522	617
			L		190	190	450	450
	Cooling	Cooling Capacity[e]	H	kW	2.34	3.14	4.03	4.48
			M		1.59	1.87	3.05	3.55
			L		1.36	1.36	2.77	2.77
		Sensible Cooling Capacity[e]	H		1.69	2.38	2.9	3.2
			M		1.14	1.34	2.2	2.5
			L		0.96	0.96	1.9	1.9
		Latent Cooling Capacity	H		0.65	0.76	1.13	1.28
			M		0.45	0.53	0.85	1.05
			L		0.4	0.4	0.87	0.87
		FCEER[e]	Rating		56.41	56.01	72.02	71.93
			Class		D	D	D	D
	Heating	Heating Capacity[e]	H	kW	2.4	3.33	4.3	4.73
			M		1.61	1.9	3.27	3.76
			L		1.32	1.32	2.88	2.88
		Max. Electric Heater Capacity			1		2	
		FCCOP[e]	Rating		55.85	55.91	76.50	76.01
			Class		E	E	D	D
	Soun	Sound Pressure Level (Outlet)		dB(A)	39/ 33 /26	43 / 36 / 26	47 / 38 / 28	49 / 43 / 28
		Sound Power Level (Outlet)[e]			48/ 42 /39	52 / 45 / 39	56 / 47 / 41	58 / 52 / 41
	Electrical	Power input in cooling mode[e]	H	W	51	63	67	80
			M		29	35	48	54
			L		23	23	35	35
		Power input in heating mode[e]	H	W	51	63	67	80
			M		29	35	48	54
			L		23	23	35	35
		Fan Motor Running Current @ H		A	0.16	0.22	0.27	0.34
		Fan Motor Starting Current @ H			0.47	0.65	0.82	1.02
	Hydraulic	Cooling Water Flow Rate	H	L/h	400	540	691	767
			M		272	319	531	616
			L		232	232	474	474
		Cooling Pressure Drop[e]	H	kPa	10.9	19.5	33.8	39.7
			M		5.7	7.4	21.3	27.4
			L		4.3	4.3	17.3	17.3
		Heating Water Flow Rate	H	L/h	409	557	716	775
			M		283	331	556	635
			L		238	238	495	495
		Heating Pressure Drop[e]	H	kPa	10.2	19.2	33.5	38.8
			M		5.2	6.8	21.3	26.9
			L		3.7	3.7	16.6	16.6
		Water Content		L	1.25		1.56	
Construction and Packing Data		Water Connections	Type		Socket(Threaded Female)			
			In	mm[in]	19.05 [3/4]			
			Out					
		Condensate Drainage Connection						
		Dimensions	L	mm	575			
			W		575			
			H		250		290	
		Panel Dimensions			680 x 680 x 28			
		Net Weight		kg	28		30	

"e": Above specifications are based on the published Eurovent test data of the year of publication of this document. To confirm the most updated specifications please visit www.eurovent-certification.com.
Eurovent testing conditions:

a. Cooling mode (2-pipe):
- Return air temperature: 27C DB/ 19C WB.
- Inlet/ Outlet water temperature: 7C/ 12C.

b. Heating mode (2-pipe):
- Return air temperature: 20C.
- Inlet/ Outlet water temperature: 45C/40C

Product range: FCSD Flexi Hydronic Cassette
FCSD-V~ Hydronic Cassette 2-pipe with AC Motor

		FCSD-[Size]-V~			FCSD-08R2	FCSD-09	FCSD-12	FCSD-16
Unit Configuration		Configuration			2-pipe			
		Number Of Fan Blowers			Single	Twin		
		Power Supply		(V/Ph/Hz)	230 / 1 / 50 220 / 1 / 60			
		Operation Control - FCSD(H)			~S: Complete function onboard PCB with integrated group control functionality. ~W: Flexible function onboard PCB with drain pump, louver and zone control functionality. ~X: No control box pre-installed.			
Performance Data	Air	Air Flow	H	m³/hr	810	1020	1280	1450
			M		617	540	910	1100
			L		450	360	780	780
	Cooling	Cooling Capacity[e]	H	kW	5.14	6.01	7.55	8.33
			M		4.14	3.55	5.71	6.67
			L		3.19	2.53	5.02	5.02
		Sensible Cooling Capacity[e]	H		4.17	4.32	5.41	6
			M		3.31	2.52	4.07	4.77
			L		2.5	1.78	3.56	3.56
		Latent Cooling Capacity	H		0.97	1.69	2.14	2.33
			M		0.83	1.03	1.64	1.9
			L		0.69	0.75	1.46	1.46
		FCEER[e]	Rating		87.35	61.49	68.33	66.48
			Class		C	D	D	D
	Heating	Heating Capacity[e]	H	kW	5.43	6.09	7.64	8.48
			M		4.33	3.55	5.73	6.73
			L		3.32	2.49	5.02	5.02
		Max. Electric Heater Capacity			2	3		
		FCCOP[e]	Rating		93.11	61.34	69.07	67.39
			Class		D	E	E	E
	Sound	Sound Pressure Level (Outlet)		dB(A)	49/43/28	45/42/28	50/44/31	54/46/31
		Sound Power Level (Outlet)[e]			57/52/41	54/51/42	59/53/48	63/55/48
	Electrical	Power input in cooling mode [e]	H	W	103	106	112	152
			M		52	61	93	110
			L		31	39	69	69
		Power input in heating mode [e]	H	W	101	106	112	152
			M		51	61	93	110
			L		31	39	69	69
		Fan Motor Running Current @ H		A	0.34	0.41	0.53	0.67
		Fan Motor Starting Current @ H			1.02	1.22	1.59	2.01
	Hydraulic	Cooling Water Flow Rate	H	L/h	880	1032	1307	1427
			M		709	611	979	1144
			L		549	432	864	864
		Cooling Pressure Drop[e]	H	kPa	56.1	36.7	37	44
			M		40.2	14.9	22.8	30
			L		24.3	8.3	18.2	18.2
		Heating Water Flow Rate	H	L/h	792	1001	1276	1392
			M		649	612	974	1129
			L		506	448	864	864
		Heating Pressure Drop[e]	H	kPa	54.9	33.7	33.9	40.7
			M		38.7	13.4	20.6	27.4
			L		23.2	7.3	16.4	16.4
		Water Content		L	1.38	2.22	2.77	
Construction and Packing Data		Water Connections	Type		Socket(Threaded Female)			
			In	mm[in]	19.05[3/4]			
			Out					
		Condensate Drainage Connection						
		Dimensions	L	mm	575	1140		
			W		575	580		
			H		290	250	290	
		Panel Dimensions			680 x 680 x 28	680 x 1240 x 28		
		Net Weight		kg	33	50	52	

"e": Above specifications are based on the published Eurovent test data of the year of publication of this document. To confirm the most updated specifications please visit www.eurovent-certification.com.
Eurovent testing conditions:

a. Cooling mode (2-pipe):
- Return air temperature: 27C DB/ 19C WB.
- Inlet/ Outlet water temperature: 7C/ 12C.

b. Heating mode (2-pipe):
- Return air temperature: 20C.
- Inlet/ Outlet water temperature: 45C/40C.

Product range: FCSD(H) Flexi Hydronic Cassette
FCSD(H)-V~ Hydronic Cassette 2-pipe with AC Motor

		FCSD(H)-[Size]-V~			FCSD(H)-09	FCSD(H)-10	FCSD(H)-12	FCSD(H)-16	FCSD(H)-18	FCSD(H)-20	FCSD(H)-24*
Unit Configuration		Configuration			2-pipe						
		Number Of Fan Blowers			Single						
		Power Supply		(V/Ph/Hz)	230 / 1 / 50 220 / 1 / 60						
		Operation Control			~S: Complete function onboard PCB with integrated group control functionality. ~W: Flexible function onboard PCB with drain pump, louver and zone control functionality. ~X: No control box pre-installed.						
Performance Data	Air	Air Flow	H	m^3/hr	960	1050	1300	1970	2130	2250	2750
			M		820	820	960	1640	1640	1970	2000
			L		700	700	700	1380	1380	1380	1530
	Cooling	Cooling Capacity[e]	H	kW	5.47	5.77	6.84	9.55	10.64	11	15.21
			M		4.82	4.75	5.37	8.8	8.65	9.31	12.08
			L		4.23	4.17	4.17	7.5	7.37	7.37	9.7
		Sensible Cooling Capacity[e]	H		3.91	4.21	5.01	7.37	7.87	8.21	11.09
			M		3.43	3.43	3.91	6.35	6.35	7.37	8.65
			L		3.03	3.03	3.03	5.52	5.52	5.52	5.52
		Latent Cooling Capacity	H		1.56	1.56	1.83	2.18	2.77	2.79	4.12
			M		1.39	1.32	1.46	2.45	2.3	1.94	3.43
			L		1.2	1.14	1.14	1.98	1.85	1.85	4.18
		FCEER[e]	Rating		61.94	69.34	64.1	49.41	56.07	48.07	46.8
			Class		D	D	D	E	D	E	E
	Heating	Heating Capacity[e]	H	kW	6.4	5.98	7.21	10.8	11.2	11.7	15.9
			M		5.61	4.87	5.55	9.88	9.08	10.5	12.6
			L		4.97	4.25	4.25	8.26	7.88	7.88	10.3
		Max. Electric Heater Capacity			3			4`			
		FCCOP[e]	Rating		99.46	73.51	66.9	54.78	59.57	53.29	54.1
			Class		D	D	E	E	E	E	E
	Sound	Sound Pressure Level (Outlet)		dB(A)	51/45/42	54/45/42	58/51/42	56/49/47	58/49/47	61/56/47	64/57/48
		Sound Power Level (Outlet)[e]			60/54/51	63/54/51	67/60/49	65/60/56	67/58/56	70/65/56	73/66/57
	Electrical	Power input in cooling mode[e]	H	W	113	110	133	273	260	298	372
			M		83	73	99	173	150	237	270
			L		64	56	56	148	128	128	180
		Power input in heating mode[e]	H	W	83	97	133	273	260	298	367
			M		61	71	99	173	150	237	265
			L		47	55	56	148	128	128	175
		Fan Motor Running Current @ H		A	0.40	0.49	0.60	1.04	1.17	1.35	1.62
		Fan Motor Starting Current @ H			1.19	1.46	1.80	3.12	3.50	4.06	4.85
	Hydraulic	Cooling Water Flow Rate	H	L/h	927	996	1178	1605	1831	1897	2607
			M		820	820	927	1493	1493	1605	2071
			L		717	717	717	1271	1271	1271	1663
		Cooling Pressure Drop[e]	H	kPa	25.7	29	39	39.4	36.5	39.1	15.21
			M		20.5	20.5	25.7	27.9	25.1	32.8	10.29
			L		16.5	16.5	16.5	24.1	20.1	20.1	7.08
		Heating Water Flow Rate	H	L/h	931	999	1171	1756	1860	1933	2733
			M		830	830	931	1519	1519	1756	2161
			L		727	727	727	1335	1335	1335	1758
		Heating Pressure Drop[e]	H	kPa	20.9	27.5	38	32.2	35.5	38.6	13.8
			M		16.7	19.2	24.3	20.9	24.3	35.3	9.25
			L		13.3	15.3	15.3	19.7	20	20	6.51
		Water Content		L	1.78			2.41			3
Construction and Packing Data		Water Connections	Type		Socket(Threaded Female)						
			In	mm[in]	19.05[3/4]						
			Out								
		Condensate Drainage Connection									
		Dimensions	L	mm	730			830			960
			W		730			830			960
			H		260			290			290
		Panel Dimensions			830 x 830 x 28			980 x 980 x 28			1140 x 1140 x 28
		Net Weight		kg	36			50			54

"e": Above specifications are based on the published Eurovent test data of the year of publication of this document. To confirm the most updated specifications please visit www.eurovent-certification.com.
Eurovent testing conditions:

a. Cooling mode (2-pipe):
- Return air temperature: 27C DB/ 19C WB.
- Inlet/ Outlet water temperature: 7C/ 12C.

b. Heating mode (2-
- Return air temperature: 20C.
- Inlet/ Outlet water temperature: 45C/40C.

* FCSD(H)-24 is not certified by Eurovent.

A.2.2. 4-Pipe Systems

Product range: FCSD(H) Flexi Hydronic Cassette
FCSD(H)-P~ Hydronic Cassette 4-pipe with AC Motor

					FCSD(H)-[Size]-P~	FCSD-06	FCSD-08	FCSD-09	FCSD-16	FCSD(H)-12	FCSD(H)-20	FCSD(H)-24*
Unit Configuration					Configuration	4-pipe						
					Number Of Fan Blowers	Single			Twin		Single	
					Power Supply (V/Ph/Hz)	230 / 1 / 50 220 / 1 / 60						
					Operation Control	~S: Complete function onboard PCB with integrated group control functionality. ~W: Flexible function onboard PCB with drain pump, louver and zone control functionality. ~X: No control box pre-installed.						
Performance Data	Air	Air Flow	H	m^3/hr		685	800	1020	1450	1300	2250	2750
			M			570	620	540	1100	960	1970	2000
			L			500	500	360	780	700	1380	1530
	Cooling	Cooling Capacity[e]	H	kW		3.13	3.77	3.84	4.62	5.7	7.35	11.87
			M			2.76	2.82	2.37	3.94	4.51	6.33	9.43
			L			2.42	2.39	1.74	3.06	3.54	5.02	7.57
		Sensible Cooling Capacity[e]	H			2.7	2.79	2.85	3.58	4.23	5.62	9.11
			M			2.43	2.07	1.74	3.02	3.33	4.8	7.11
			L			2.18	1.74	1.27	2.32	2.58	3.74	5.67
		Latent Cooling Capacity	H			0.43	0.98	0.99	1.04	1.47	1.73	2.76
			M			0.33	0.75	0.63	0.92	1.18	1.53	2.32
			L			0.24	0.65	0.47	0.74	0.96	1.28	1.9
		FCEER[e]	Rating			86.4	60.26	41.55	39.81	54.14	32.28	38.5
			Class			C	D	E	E	E	E	E
	Heating	Heating Capacity[e]	H	kW		3.84	3.75	5.08	6.26	4.06	8.51	11.5
			M			3.48	3.28	3.11	5.07	3.24	7.61	9.12
			L			3.27	2.79	2.28	3.92	2.56	5.92	7.41
		FCCOP[e]	Rating			114.56	70.49	54.91	51.85	39.73	39.52	39.0
			Class			C	D	E	E	E	E	E
	Sound	Sound Pressure Level (Outlet)		dB(A)		47/38/28	49/43/28	45/42/28	54/46/31	58/51/42	61/56/47	64/57/48
		Sound Power Level (Outlet)[e]				57/46/42	58/52/41	54/51/42	63/55/48	67/60/49	70/65/56	73/66/57
	Electrical	Power input in cooling mode[e]	H	W		56	80	106	152	133	298	372
			M			33	54	61	110	99	237	270
			L			26	35	39	69	56	128	180
		Power input in heating mode[e]	H	W		56	80	106	152	133	298	367
			M			33	54	61	110	99	237	265
			L			26	35	39	69	56	128	175
		Fan Motor Running Current @ H		A		0.27	0.34	0.40	0.67	0.60	1.35	1.62
		Fan Motor Starting Current @ H				0.82	1.02	1.19	2.01	1.80	4.06	4.85
	Hydraulic	Cooling Water Flow Rate	H	L/h		526	652	680	794	979	1264	2035
			M			457	486	416	677	779	1086	1617
			L			411	411	305	521	613	864	1298
		Cooling Pressure Drop[e]	H	kPa		20.8	20.9	56.8	18	52.2	29.1	14.34
			M			14.7	12.6	24.6	13.6	34.8	22.4	9.7
			L			14	9.5	14.3	8.8	22.7	14.7	6.68
		Heating Water Flow Rate	H	L/h		291	325	452	561	352	733	988
			M			255	271	278	457	282	668	781
			L			228	228	204	350	220	508	636
		Heating Pressure Drop[e]	H	kPa		12.9	7.8	8.2	20	15.3	21.1	18.7
			M			8.9	6.5	5	16.2	12.3	19.3	12.5
			L			7.9	5.5	3.7	12.5	9.6	14.6	8.81
		Water Content	Cooling Coil	L		1.07	1.07	1.359	1.913	1.37	1.665	2.1
			Heating Coil			0.49	0.49	0.857	0.857	0.408	0.742	0.9
Construction and Packing Data		Water Connections	Type			Socket(Threaded Female)						
			In	mm[in]		19.05[3/4]						
			Out									
		Condensate Drainage Connection										
		Dimensions	L	mm		575		1140		730	830	960
			W			575		580		730	830	960
			H			290		250	290	260	290	290
		Panel Dimensions				680 x 680 x 28		680 x 1240 x 28		830 x 830 x 28	980 x 980 x 28	1140 x 1140 x 28
		Net Weight		kg		30	30	50	52	36	50	54

"e": Above specifications are based on the published Eurovent test data of the year of publication of this document. To confirm the most updated specifications please visit www.eurovent-certification.com.
Eurovent testing conditions:

a. Cooling mode (4-pipe)
- Return air temperature: 27C DB/ 19C WB.
- Inlet/ Outlet water temperature: 7C/ 12C.

b. Heating mode (4-pipe):
- Return air temperature: 20C.
- Inlet/ outlet water temperature: 65C/ 55C.

* FCSD(H)-24 is not certified by Eurovent.

A.3. Coil Data

A.3.1. 2-Pipe Systems

Model	Fin Height (mm)	Fin Length (mm.)		Fins / inch	No. of rows	No. of circuits	Tube Diameter (inch)
		Inner	Outer				
FCSD-03/04-V	200	1196	1299	13	2	3	3/8”
FCSD-06/08-V	250	1196	1299	13	2	3	3/8”
FCSD-08R2-V	250	1196	1299	13	3	5	1/4”
FCSD-09-V	200	2148	2286	13	2	4	3/8”
FCSD-12/16-V	250	2148	2286	13	2	5	3/8”
FCSD(H)-09/10/12-V	225	1530	1634	13	2	4	3/8”
FCSD(H)-16/18/20-V	250	1874	1979	13	2	6	3/8”
FCSD(H)-24-V	250	2450	2555	13	2	10	3/8”

A.3.2. 4-Pipe Systems

Cooling Coil

Model	Fin Height (mm)	Fin Length (mm.)		Fins / inch	No. of rows	No. of circuits	Tube Diameter (inch)
		Inner	Outer				
FCSD-06/08-P	250	1196	1299	13	2	3	3/8”
FCSD-09-P	200	2148	2286	13	2	3	3/8”
FCSD-12/16-P	250	2148	2286	13	2	5	3/8”
FCSD(H)-09/10/12-P	225	1530	1634	13	2	3	3/8”
FCSD(H)-16/18/20-P	250	1874	1979	13	2	5	3/8”
FCSD(H)-24	250	2450	2555	13	2	7	3/8”

Heating Coil

Model	Fin Height (mm)	Fin Length (mm.)		Fins / inch	No. of rows	No. of circuits	Tube Diameter (inch)
		Inner	Outer				
FCSD-06/08-P	250	1196	1299	13	1	3	3/8”
FCSD-09-P	200	2148	2286	13	1	3	3/8”
FCSD-12/16-P	250	2148	2286	13	1	3	3/8”
FCSD(H)-09/10/12-P	225	1530	1634	13	1	2	3/8”
FCSD(H)-16/18/20-P	250	1874	1979	13	1	3	3/8”
FCSD(H)-24	250	2450	2555	13	1	3	3/8”

A.4. Dimensional Drawings

Dimensional Drawings of 2-pipe unit

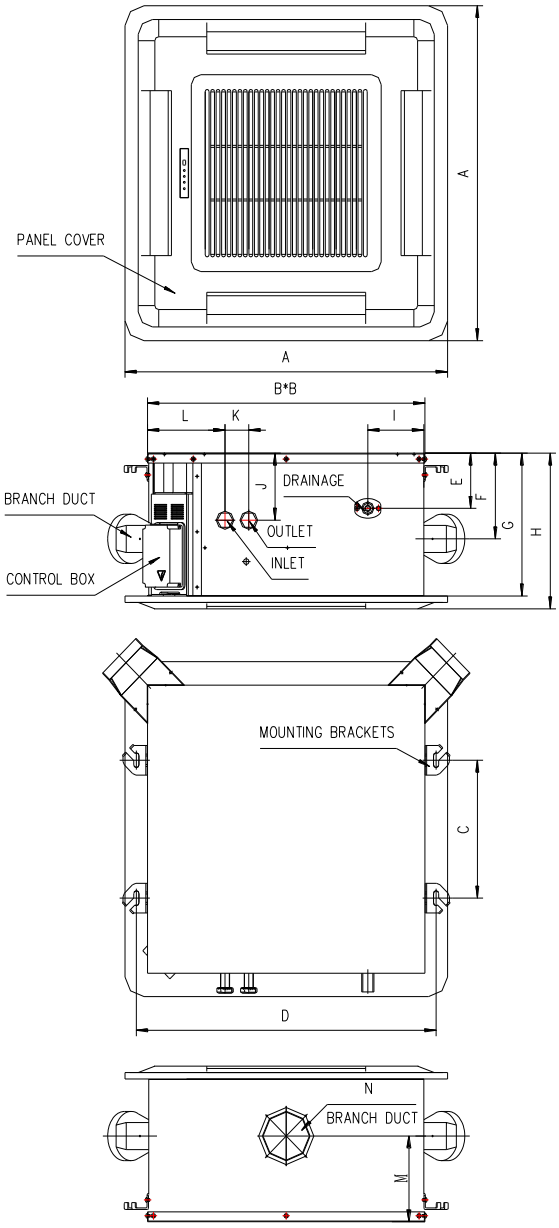

Model	A	B	C	D	E	F	G
FCSD-03/04-V	680	582	280	627	62	124	255
FCSD-06/08/08R2-V	680	582	280	627	112	174	290
FCSD(H)-09/10/12-V	830	730	344	775	84	149	260
FCSD(H)-16/18/20-V	980	830	487	875	106	177	290
FCSD(H)-24	1140	960	617	1005	106	177	290

Model	H	I	J	K	L	M	N
FCSD-03/04-V	283	118	110	50	162	124	ϕ100
FCSD-06/08/08R2-V	318	118	136	50	162	174	ϕ100
FCSD(H)-09/10/12-V	288	125	163	50	162	132	ϕ100
FCSD(H)-16/18/20-V	318	118	146	50	155	146	ϕ100
FCSD(H)-24	318	118	146	50	155	146	ϕ100

(All dimensions shown in mm)

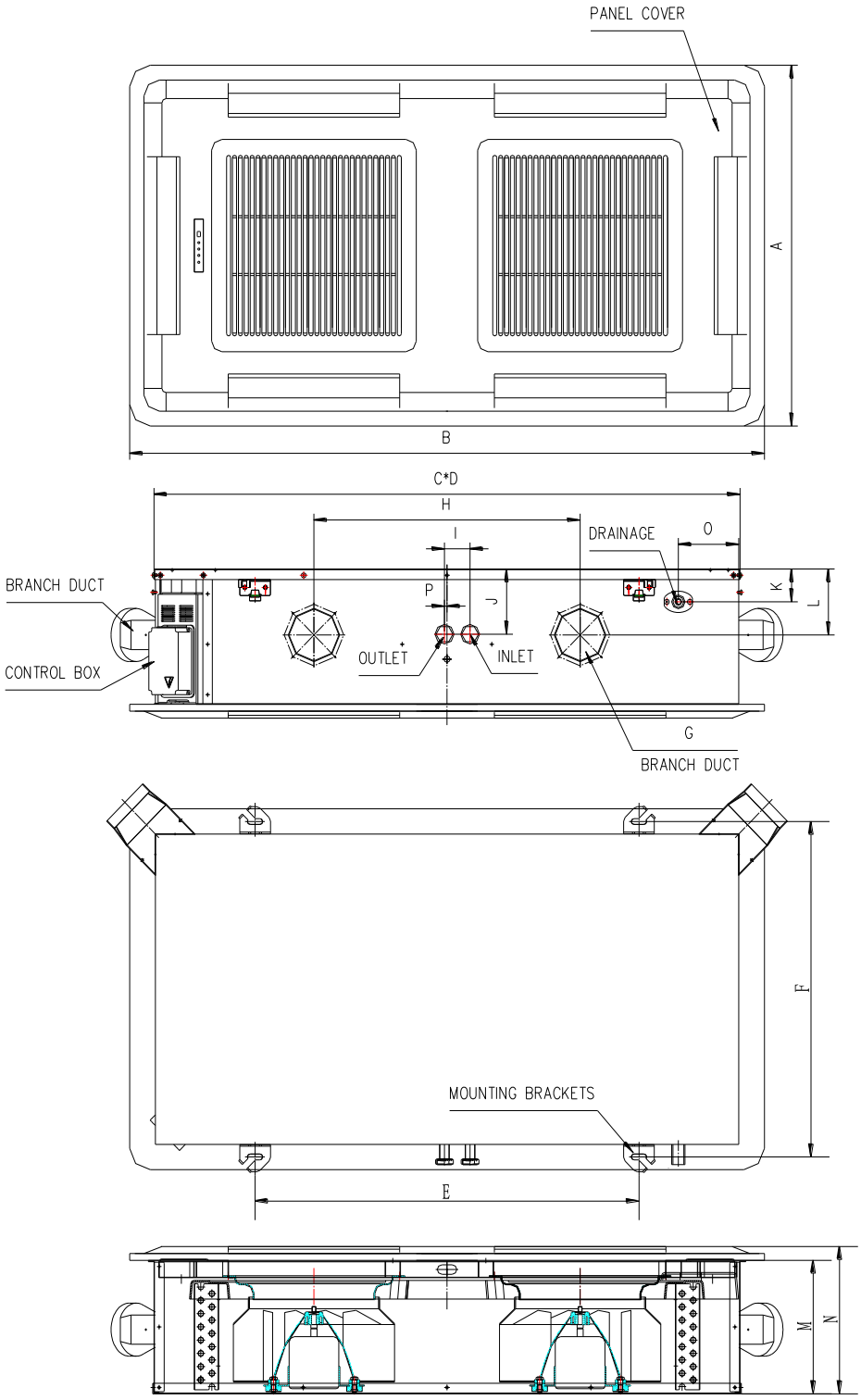

Model	A	B	C	D	E	F	G	H
FCSD-09-V	680	1240	1145	585	750	630	ϕ100	520
FCSD-12/16-V	680	1240	1145	585	750	630	ϕ100	520

Model	I	J	K	L	M	N	O
FCSD-09-V	50	123	62	124	255	283	118
FCSD-12/16-V	50	135	112	174	290	318	118

(All dimensions shown in mm)

Dimensional Drawings of 4-pipe unit

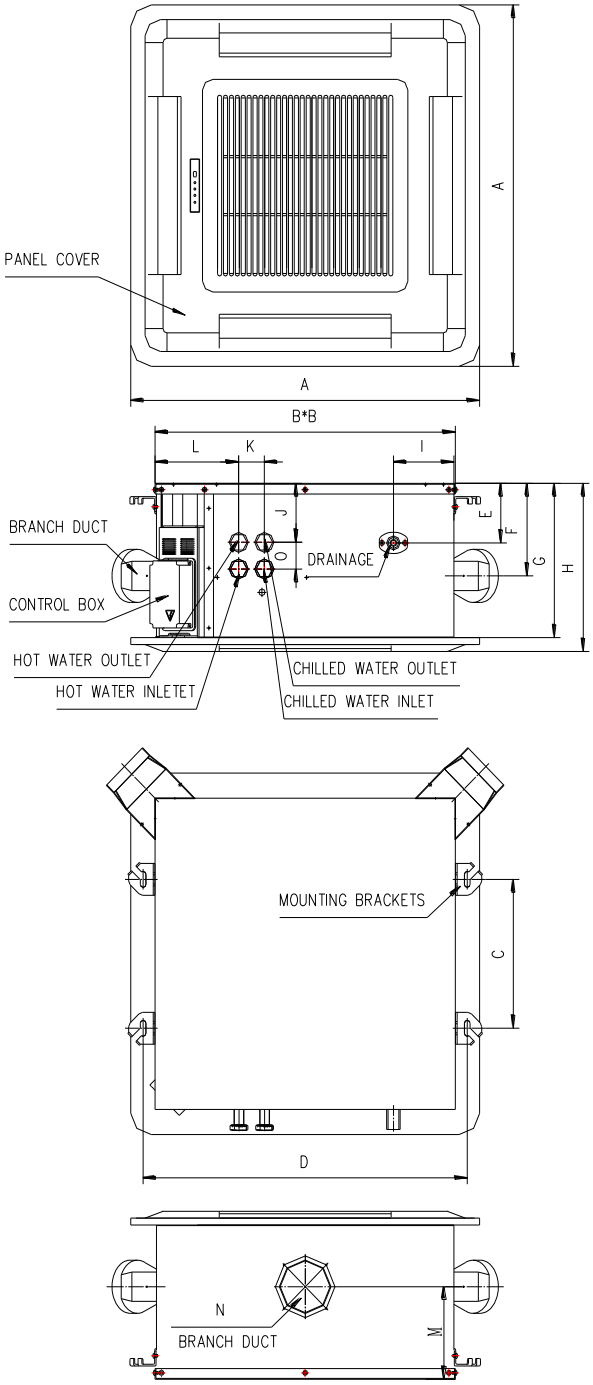

Model	A	B	C	D	E	F	G	H
FCSD-06/08-P	680	582	280	627	112	174	290	318
FCSD(H)-12-P	830	730	344	775	84	149	260	288
FCSD(H)-20-P	980	830	487	875	106	177	290	318
FCSD(H)-24-P	1140	960	617	1005	106	177	290	318

Model	I	J	K	L	M	N	O
FCSD-06/08-P	118	110	50	162	174	ϕ100	50
FCSD(H)-12-P	125	113	50	162	132	ϕ100	50
FCSD(H)-20-P	118	110	50	155	146	ϕ100	50
FCSD(H)-24-P	118	110	50	155	146	ϕ100	50

(All dimensions shown in mm)

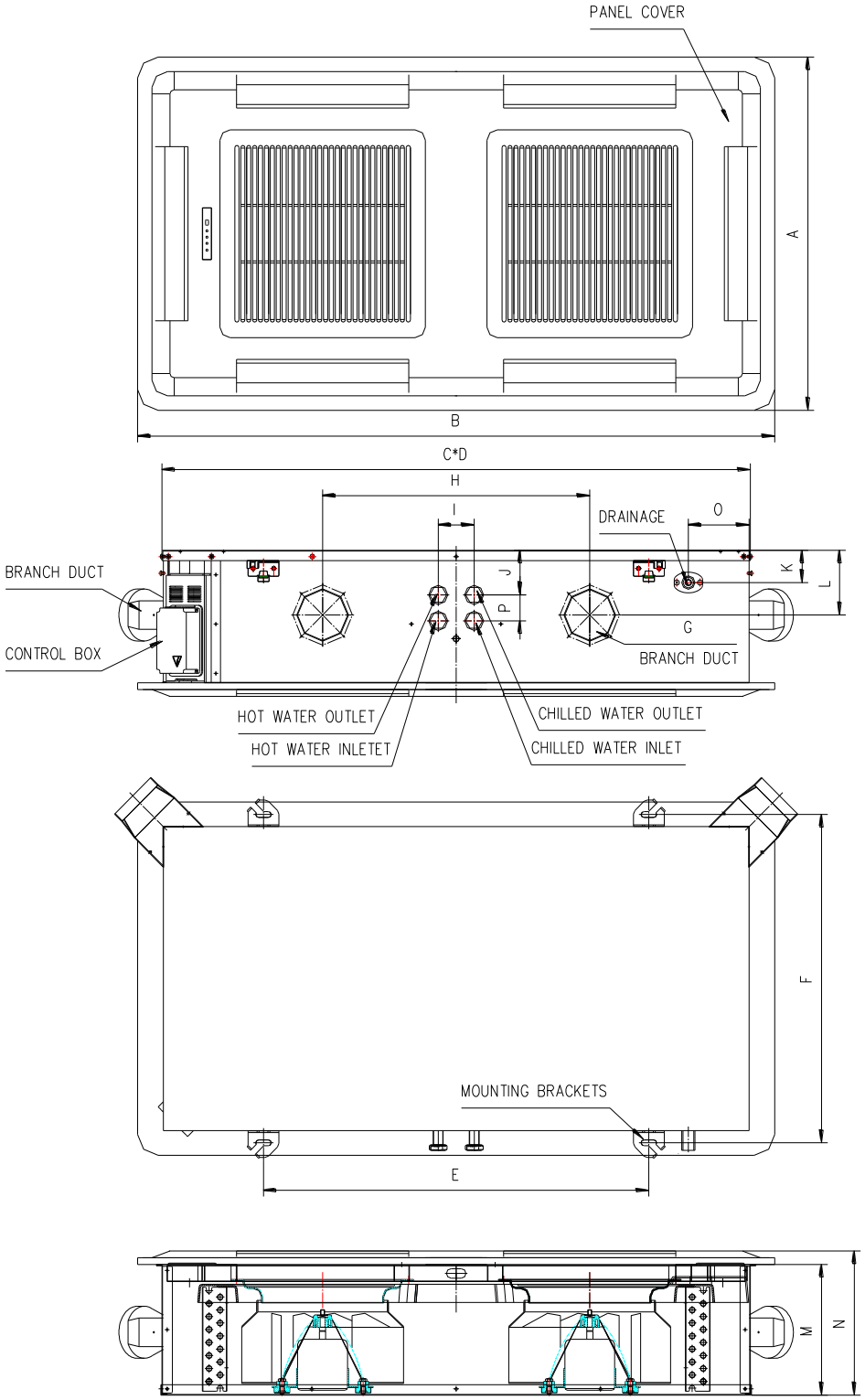

Model	A	B	C	D	E	F	G	H
FCSD-09-P	680	1240	1145	585	750	630	ϕ100	520
FCSD-16-P	680	1240	1145	585	750	630	ϕ100	520

Model	I	J	K	L	M	N	O	P
FCSD-09-P	70	86	62	124	255	283	118	50
FCSD-16-P	70	110	112	174	290	318	118	50

(All dimensions shown in mm)

A.5. Sound power data

Model		FCSD-03			FCSD-04			FCSD-06			FCSD-08		
Speed		L	M	H	L	M	H	L	M	H	L	M	H
Sound Power dB(A)		**34.8**	**38.9**	**48.5**	**34.8**	**40.8**	**52.0**	**37.3**	**43.8**	**55.5**	**37.3**	**52.8**	**58.5**
Sound Power in 1/3 Octave-bands under ESP:0Pa (dB)	20.0 Hz	14.5	22.1	14.0	14.5	17.1	17.7	13.2	15.3	17.6	13.2	13.6	18.5
	25.0 Hz	17.6	14.8	11.6	17.6	14.2	13.2	9.3	12.2	13.0	9.3	11.6	13.9
	31.5 Hz	19.1	15.6	20.1	19.1	20.2	22.5	20.0	15.2	15.5	20.0	18.2	15.0
	40.0 Hz	10.9	15.5	10.1	10.9	11.7	13.7	12.5	14.2	11.2	12.5	15.1	8.9
	50.0 Hz	15.1	19.4	15.0	15.1	15.3	15.1	13.6	15.8	16.2	13.6	12.1	16.8
	63.0 Hz	17.3	16.9	20.0	17.3	14.0	16.0	20.4	20.5	17.8	20.4	16.2	19.1
	80.0 Hz	14.4	6.8	9.9	14.4	8.7	24.7	8.1	9.1	15.2	8.1	13.4	20.4
	100.0 Hz	16.5	15.4	17.0	16.5	18.2	21.8	13.0	17.3	26.1	13.0	22.5	32.3
	125.0 Hz	20.9	22.2	30.2	20.9	24.4	32.7	25.0	29.1	34.4	25.0	31.8	38.7
	160.0 Hz	26.2	28.5	34.4	26.2	32.8	42.0	28.0	32.6	38.2	28.0	35.7	41.0
	200.0 Hz	23.9	26.6	33.3	23.9	30.4	37.4	25.6	31.4	37.1	25.6	33.8	40.3
	250.0 Hz	19.8	25.3	34.3	19.8	30.9	40.7	28.2	35.3	42.8	28.2	38.2	45.5
	315.0 Hz	22.5	26.5	38.4	22.5	32.4	42.1	29.8	38.2	46.4	29.8	43.5	48.3
	400.0 Hz	20.0	26.9	36.8	20.0	30.4	43.6	24.6	34.2	47.2	24.6	40.8	50.1
	500.0 Hz	23.9	35.4	46.8	23.9	33.6	45.4	28.6	36.9	47.8	28.6	40.6	50.1
	630.0 Hz	16.9	21.2	37.1	16.9	26.4	40.4	26.4	34.1	44.8	26.4	40.2	48.8
	800.0 Hz	18.9	20.0	32.2	18.9	24.9	39.8	22.3	33.0	45.4	22.3	38.3	47.7
	1000.0 Hz	18.3	18.2	32.7	18.3	25.2	40.3	21.3	32.3	44.0	21.3	37.4	47.5
	1250.0 Hz	21.9	19.0	28.1	21.9	28.8	38.3	21.9	33.6	46.2	21.9	38.5	48.9
	1600.0 Hz	18.0	17.8	25.1	18.0	20.4	33.9	17.0	29.1	41.1	17.0	36.3	43.5
	2000.0 Hz	18.9	19.0	23.4	18.9	20.2	31.2	17.8	25.5	42.2	17.8	34.5	45.6
	2500.0 Hz	19.1	19.2	21.8	19.1	19.3	28.9	16.9	22.5	39.0	16.9	29.1	44.5
	3150.0 Hz	19.2	19.1	20.1	19.2	19.2	29.8	17.3	20.2	34.5	17.3	25.8	39.1
	4000.0 Hz	19.6	19.5	20.0	19.6	19.9	22.7	17.5	18.7	30.0	17.5	21.9	34.4
	5000.0 Hz	19.6	19.5	19.5	19.6	19.7	21.8	17.4	17.7	25.5	17.4	19.1	29.7
	6300.0 Hz	19.5	19.1	19.2	19.5	19.2	20.7	17.1	17.1	21.2	17.1	17.9	25.5
	8000.0 Hz	18.2	18.3	18.3	18.2	18.0	18.4	16.1	16.3	18.4	16.1	16.5	21.7
	10000.0 Hz	16.4	16.3	16.5	16.4	16.5	16.6	14.3	14.4	15.3	14.3	14.5	16.6
	12500.0 Hz	13.4	13.6	13.7	13.4	13.7	13.5	11.5	11.6	11.8	11.5	12.5	12.5
	16000.0 Hz	10.5	10.6	10.4	10.5	10.4	10.3	8.2	8.2	8.3	8.2	20.5	8.4

Model		FCSD(H)-09			FCSD(H)-10			FCSD(H)-12			FCSD(H)-16			FCSD(H)-18			FCSD(H)-20			FCSD(H)-24		
Speed		L	M	H	L	M	H	L	M	H	L	M	H	L	M	H	L	M	H	L	M	H
Sound Power dB(A)		**45.2**	**49.9**	**56.9**	**45.2**	**49.9**	**60.2**	**45.2**	**56.9**	**63.8**	**54.2**	**56.7**	**65.2**	**54.2**	**56.7**	**67.8**	**54.2**	**65.2**	**70.4**	**56.5**	**65.6**	**72.9**
Sound Power in 1/3 Octave-bands under ESP:0Pa (dB)	20.0 Hz	19.5	18.0	21.3	19.5	18.0	21.6	19.5	21.3	19.7	17.2	16.6	12.5	17.2	16.6	17.2	17.2	12.5	24.5	15.0	19.5	17.6
	25.0 Hz	15.5	20.5	21.7	15.5	20.5	22.0	15.5	21.7	18.7	17.5	15.8	13.4	17.5	15.8	19.3	17.5	13.4	27.7	21.4	22.2	19.5
	31.5 Hz	20.3	21.6	24.2	20.3	21.6	16.1	20.3	24.2	16.4	21.6	12.4	10.9	21.6	12.4	19.4	21.6	10.9	24.9	13.9	15.8	25.7
	40.0 Hz	16.6	21.1	20.6	16.6	21.1	14.6	16.6	20.6	14.6	17.9	14.0	14.3	17.9	14.0	19.1	17.9	14.3	28.7	15.4	14.7	23.9
	50.0 Hz	16.3	18.5	22.1	16.3	18.5	15.4	16.3	22.1	20.0	13.5	13.9	17.6	13.5	13.9	20.0	13.5	17.6	29.9	19.2	18.3	24.5
	63.0 Hz	18.3	21.8	21.4	18.3	21.8	21.7	18.3	21.4	19.9	17.2	16.9	28.3	17.2	16.9	27.1	17.2	28.3	29.2	26.3	30.2	36.4
	80.0 Hz	10.9	14.7	26.4	10.9	14.7	22.6	10.9	26.4	24.0	19.9	20.9	24.6	19.9	20.9	25.6	19.9	24.6	32.4	24.1	32.3	39.4
	100.0 Hz	23.4	26.4	30.4	23.4	26.4	33.8	23.4	30.4	38.1	27.4	28.3	36.2	27.4	28.3	33.8	27.4	36.2	36.2	30.7	37.2	44.2
	125.0 Hz	26.8	32.9	37.4	26.8	32.9	37.3	26.8	37.4	39.5	34.4	36.2	45.5	34.4	36.2	48.7	34.4	45.5	53.0	39.8	45.5	57.5
	160.0 Hz	35.5	39.3	47.9	35.5	39.3	47.0	35.5	47.9	49.5	39.7	42.4	49.0	39.7	42.4	49.9	39.7	49.0	52.6	39.1	49.3	55.3
	200.0 Hz	33.6	40.3	46.1	33.6	40.3	50.3	33.6	46.1	54.5	40.5	43.7	51.4	40.5	43.7	53.6	40.5	51.4	56.5	45.1	56.7	56.7
	250.0 Hz	37.4	42.4	48.7	37.4	42.4	52.4	37.4	48.7	55.3	43.5	45.8	56.7	43.5	45.8	55.8	43.5	56.7	60.2	43.0	54.8	65.3
	315.0 Hz	39.3	44.8	49.1	39.3	44.8	54.1	39.3	49.1	56.7	46.0	47.1	56.0	46.0	47.1	57.6	46.0	56.0	61.2	45.4	57.5	60.7
	400.0 Hz	35.2	43.3	51.6	35.2	43.3	51.9	35.2	51.6	55.6	44.4	48.5	55.3	44.4	48.5	59.0	44.4	55.3	59.7	45.5	51.0	58.7
	500.0 Hz	46.2	47.8	55.2	46.2	47.8	57.5	46.2	55.2	61.1	45.5	44.7	53.7	45.5	44.7	57.4	45.5	53.7	58.6	47.9	53.2	59.4
	630.0 Hz	37.9	47.1	51.5	37.9	47.1	55.4	37.9	51.5	58.4	44.7	47.6	54.0	44.7	47.6	57.0	44.7	54.0	59.5	50.2	56.4	63.8
	800.0 Hz	37.6	44.7	50.8	37.6	44.7	53.8	37.6	50.8	58.0	43.2	46.7	56.3	43.2	46.7	58.1	43.2	56.3	61.2	47.8	58.2	63.7
	1000.0 Hz	34.5	41.9	49.3	34.5	41.9	54.0	34.5	49.3	56.7	41.0	45.2	55.0	41.0	45.2	56.6	41.0	55.0	58.8	45.3	55.0	63.8
	1250.0 Hz	30.2	39.4	47.0	30.2	39.4	51.4	30.2	47.0	55.5	38.3	42.0	52.4	38.3	42.0	55.2	38.3	52.4	58.1	44.7	52.4	63.9
	1600.0 Hz	27.2	36.5	44.7	27.2	36.5	49.7	27.2	44.7	53.8	43.3	44.5	51.2	43.3	44.5	53.7	43.3	51.2	56.4	43.6	51.2	59.3
	2000.0 Hz	27.0	34.9	44.6	27.0	34.9	49.5	27.0	44.6	53.9	42.9	47.2	51.0	42.9	47.2	53.2	42.9	51.0	55.5	37.5	54.6	57.5
	2500.0 Hz	25.2	32.6	42.6	25.2	32.6	50.0	25.2	42.6	53.8	36.1	43.5	52.5	36.1	43.5	53.5	36.1	52.5	54.9	32.5	48.7	60.2
	3150.0 Hz	22.6	27.7	37.8	22.6	27.7	44.4	22.6	37.8	50.1	29.6	35.2	51.7	29.6	35.2	53.8	29.6	51.7	55.8	28.7	43.4	56.5
	4000.0 Hz	23.0	25.4	34.3	23.0	25.4	41.1	23.0	34.3	46.5	26.9	32.0	46.0	26.9	32.0	50.6	26.9	46.0	52.9	25.3	39.8	51.3
	5000.0 Hz	22.8	24.1	31.4	22.8	24.1	38.4	22.8	31.4	44.1	23.5	28.8	42.7	23.5	28.8	46.0	23.5	42.7	48.9	21.4	36.1	47.4
	6300.0 Hz	22.2	22.7	26.9	22.2	22.7	33.8	22.2	26.9	40.1	19.9	23.7	39.4	19.9	23.7	42.7	19.9	39.4	45.0	19.4	32.1	44.6
	8000.0 Hz	21.4	21.3	23.7	21.4	21.3	28.5	21.4	23.7	35.5	17.3	19.4	34.8	17.3	19.4	39.1	17.3	34.8	41.9	17.9	26.7	40.3
	10000.0 Hz	19.3	19.5	20.6	19.3	19.5	23.5	19.3	20.6	29.7	14.7	15.7	28.4	14.7	15.7	33.3	14.7	28.4	36.6	15.7	21.7	35.3
	12500.0 Hz	16.5	16.6	17.0	16.5	16.6	19.0	16.5	17.0	23.6	12.6	11.9	21.0	12.6	11.9	25.6	12.6	21.0	29.1	12.9	16.3	28.3
	16000.0 Hz	13.0	12.9	13.1	13.0	12.9	13.7	13.0	13.1	16.2	12.3	8.0	12.5	12.3	8.0	16.4	12.3	12.5	19.8	10.5	10.9	19.5

Model		FCSD-09			FCSD-10			FCSD-16		
speed		L	M	H	L	M	H	L	M	H
Sound Power dB(A)		**36.9**	**41.7**	**53.4**	**43.8**	**50.2**	**59.2**	**43.8**	**55.5**	**62.7**
Sound Power in 1/3 Octave-bands under ESP:0Pa (dB)	20.0 Hz	18.5	15.4	16.8	8.3	11.9	16.4	8.3	14.8	12.5
	25.0 Hz	15.8	13.4	16.0	14.0	6.3	5.4	14.0	14.0	11.5
	31.5 Hz	10.1	12.1	17.6	12.6	13.6	11.0	12.6	12.9	10.8
	40.0 Hz	10.9	14.3	15.5	12.4	10.1	7.5	12.4	7.7	9.0
	50.0 Hz	14.8	15.7	14.3	12.8	13.5	9.7	12.8	12.7	15.4
	63.0 Hz	9.6	17.5	15.1	14.6	16.1	16.3	14.6	18.1	20.6
	80.0 Hz	4.6	9.2	18.0	9.4	15.4	22.9	9.4	17.6	25.1
	100.0 Hz	10.8	16.8	25.4	30.9	32.8	32.4	30.9	33.1	36.7
	125.0 Hz	14.7	20.3	30.1	28.9	32.7	40.1	28.9	35.4	43.3
	160.0 Hz	21.7	27.6	37.3	28.0	37.6	44.2	28.0	41.3	46.8
	200.0 Hz	21.8	30.3	40.1	32.1	37.4	45.8	32.1	41.5	48.1
	250.0 Hz	23.5	32.7	41.6	31.3	38.1	46.9	31.3	43.6	49.2
	315.0 Hz	25.9	34.7	44.7	32.3	39.3	49.7	32.3	46.0	51.9
	400.0 Hz	21.5	30.7	42.6	30.2	37.6	48.2	30.2	43.5	51.8
	500.0 Hz	31.7	34.9	46.1	38.1	41.1	50.4	38.1	46.3	55.1
	630.0 Hz	25.8	30.9	42.2	34.0	38.3	47.8	34.0	44.3	52.9
	800.0 Hz	20.2	27.9	42.7	30.3	38.3	48.0	30.3	44.3	51.6
	1000.0 Hz	19.0	27.7	42.1	34.2	38.9	49.0	34.2	45.1	52.6
	1250.0 Hz	19.3	26.9	42.6	32.3	43.9	48.9	32.3	45.7	52.8
	1600.0 Hz	19.1	24.5	42.0	24.2	37.5	48.3	24.2	44.8	49.0
	2000.0 Hz	27.0	29.6	38.6	21.4	31.9	49.6	21.4	43.1	52.4
	2500.0 Hz	19.5	21.4	34.2	18.3	27.8	44.0	18.3	37.0	49.7
	3150.0 Hz	19.8	20.7	30.6	16.5	24.7	38.7	16.5	32.7	44.3
	4000.0 Hz	19.5	20.5	27.2	16.1	20.3	34.7	16.1	28.2	39.0
	5000.0 Hz	19.9	20.8	24.3	15.5	17.2	30.5	15.5	24.0	35.4
	6300.0 Hz	19.1	19.8	21.6	14.9	15.5	26.2	14.9	19.7	31.5
	8000.0 Hz	18.6	19.4	20.6	14.1	14.3	20.6	14.1	15.8	25.5
	10000.0 Hz	15.9	16.7	17.2	12.4	12.4	15.3	12.4	12.9	19.3
	12500.0 Hz	12.7	12.9	13.9	9.4	9.4	10.7	9.4	9.7	12.7
	16000.0 Hz	8.9	9.0	17.6	5.9	5.8	6.1	5.9	5.9	7.0

A.6. Valve Information (Optional Part)

2-Way Valve Body

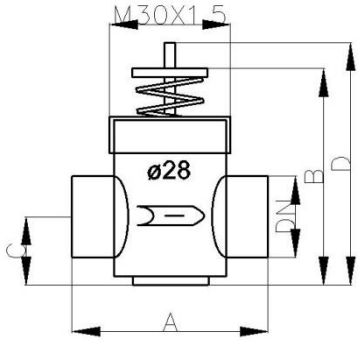

Valve Code (valve body + ON/ OFF thermoelectric actuator)	Valve Body Dimensions (mm)				
	DN	A	B	C	D
SGS14HFCA-23010101	D20 (G3/4")	56	47	22	63

3-Way Valve Body

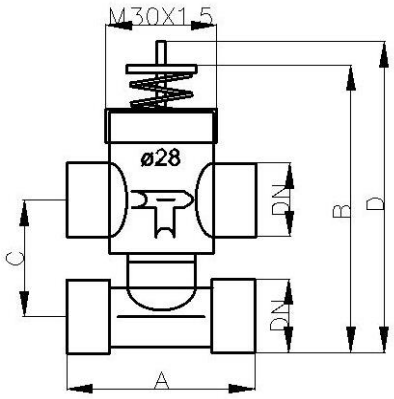

Valve Code (valve body + ON/ OFF thermoelectric actuator)	Valve Body Dimensions (mm)				
	DN	A	B	C	D
SGS14HFCA-23010102	D20 (G3/4")	56	88	50	104

Differential Pressure Chart

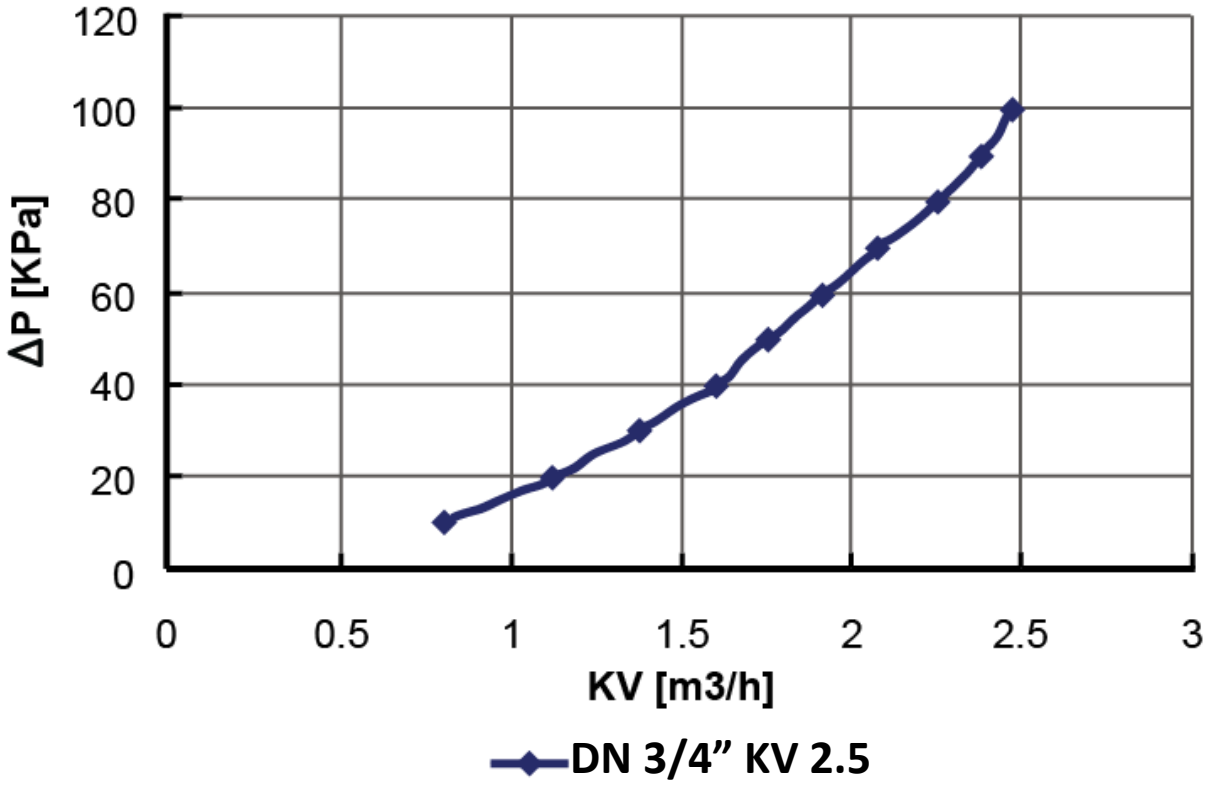

Actuator

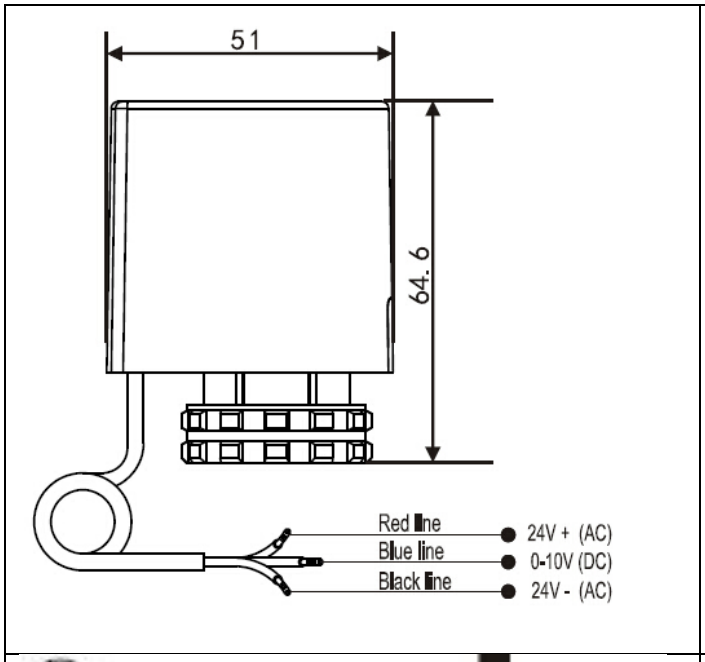

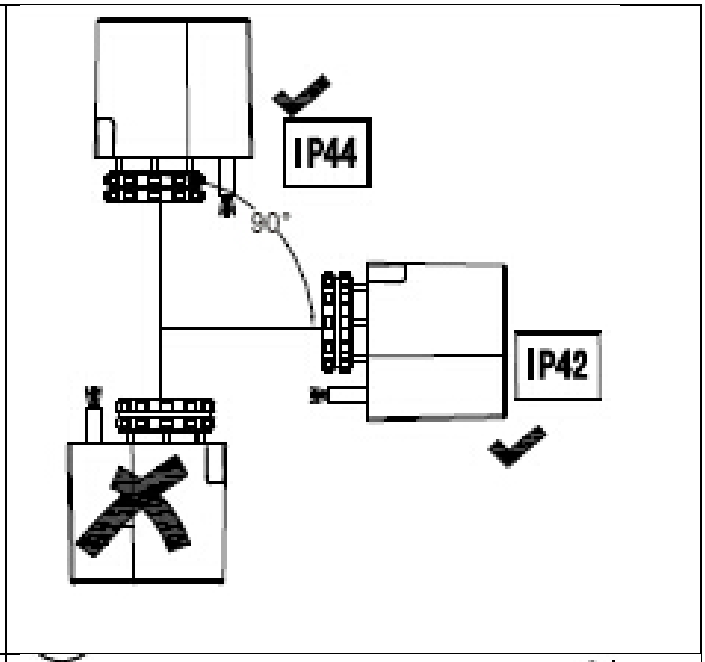

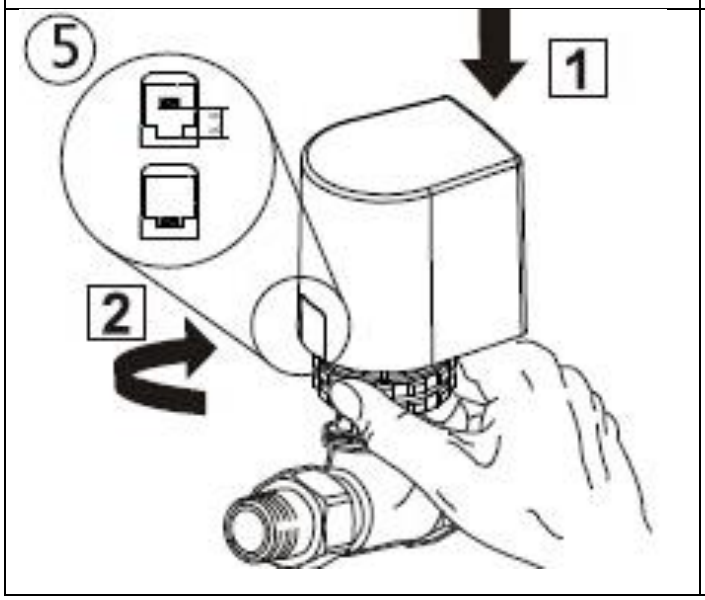

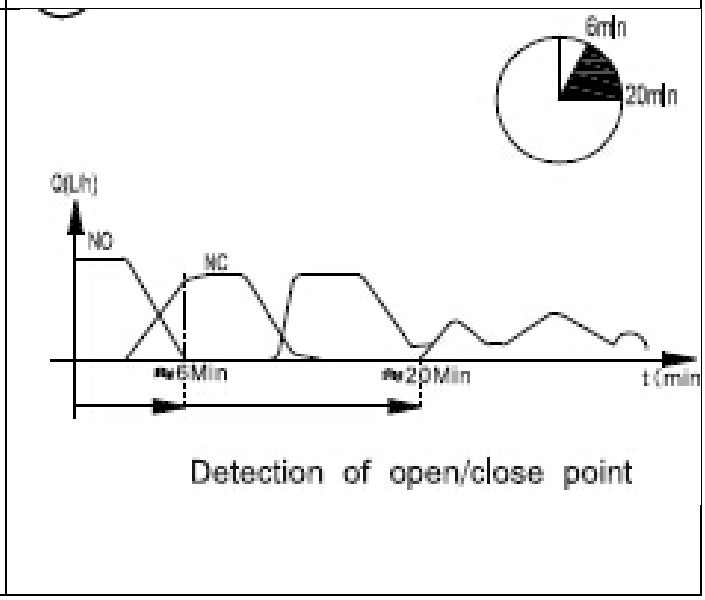

Model	DR-16-230B	DR-16-24B	DR-15B-24B
	Normal closed	Normal closed	Normal closed
Voltage	230Vac	24Vac	24Vac
Working force	90~125N	90~125N	90~125N
Time	4.5min	4.5min	4.5min
Power	3W	3W	3W
Full stroke	3.5mm	3.5mm	5.0mm
Imax	150mA	250mA	250mA
Wires	2-wire	2-wire	3-wire (red, blue, black)

B. **Installation**

B.1. Safety Precautions

- When installing, performing maintenance or servicing Polar Air fan coil units observe the precautions stated in this manual as well as those stated on the labels attached to the unit.
- Ensure all local and national safety codes, laws, regulations, as well as general electrical and mechanical safety guidelines are followed for installation, maintenance and service.
- The appliance is for indoor use only.
- Ensure the correct power supply is provided.
- If the power supply cord is damaged, it must be replaced by qualified personnel.
- Installing and servicing fan coil unit should be performed by qualified service personnel only.
- This appliance is not intended for use by persons (including children) with reduced physical, sensory or mental capabilities, or persons lacking in experience and knowledge of the appliance, unless they have been given supervision or instruction concerning it.
- User of this appliance is responsible for his/her own safety.
- Warranty shall be voided if installation instructions and safety precaution stated in this manual are not observed.
- The unit should only be switched off by using the ON-OFF button on the control interface.

CAUTIONS

Before any service or maintenance operations turn off the mains electrical supply.

DO NOT turn OFF the main power supply when the unit is operating. Turn off the unit BEFORE turning off the main power

B.2. Standard Configurations and Accessories

First check the contents of the package.

There are three types of plug-and-play control box:

- **Plug-and-play control box – S Type**

  FCSD(H)-(V/P)S configuration – complete function integrated controller, compatible with IR handset controller, wired wall-pad, serial networking for master-slave and MODBUS applications, with optional electric heater compatibility.

- **Plug-and-play control box – W Type**

  FCSD(H)-(V/P)W configuration – flexible function controller, compatible with standard wired thermostat controller, and with zone control functionality, and with optional electric heater and 24 VAC transformer compatibility.

Optional and standard accessories supplied with the unit are dependent on control configuration type.

	Control Configuration Type	
Accessory list:	~S: Complete function on board PCB with integrated group control functionality.	~W: Flexible function on board PCB with drain pump, louver and zone control functionality.
Plug-and-play control box with complete function controller.	Standard: Factory installed Optional: Field installed	N/A
IR remote handset *SGS14HFCA-16000101*	Optional (1 pc)	N/A
Wired wall-pad *SGS14HFCA-26000101*	Optional (1 pc)	N/A
Plug-and-play control box with flexible functionality	N/A	Standard: Factory installed Optional: Field installed
STCD wired thermostats ALL models	N/A	Optional (1 pc)
Installation Manual	Standard (1 pc)	Standard (1 pc)
External Drain Pan	Standard (1 pc)	Standard (1 pc)

B.3. Operating Limits

Power supplies

Volt	Phase	Hz
230	1	50
220	1	60

Water circuit

Minimum entering water temperature	+2 °C
Maximum entering water temperature	+80 °C
Water side recommended maximum pressure	1600 kPa

B.4. Before Installation

- The installation site must be established by the system designer or other qualified professional, taking account of the technical requisites and current standards and regulations.
- Cassette fan coil units must be installed by qualified personnel only.
- Cassette fan coil units are designed for installation in a false ceiling, for intake of fresh air from outside and for diverting a small part of the treated air into a neighboring room.
- They must be installed in such a way as to enable treated air to circulate throughout the room and allow the minimum distances required for technical maintenance operations.
- It is advisable to place the unit close to the installation site without removing it from packaging.
- Do not put heavy tools or weights on packaging.
- Upon receipt, the unit and the packaging must be checked for damage sustained in transit and if necessary, a damage claim must be filed with the shipping company.
- Check immediately for installation accessories inside the packaging.
- Do not lift unit by the condensate drain discharge pipe or by the water connections or front panel; lift the unit using four mounting brackets. (Figure B.4.1)
- Check and note the unit serial number.

Figure B.4.1

B.5. Installation Location

- Do not install the unit in rooms where flammable gas or alkaline acid substances are present. Aluminum/copper coils and/or internal plastic components can be damaged irreparably.
- Do not install in workshops or kitchens; drawn in oil vapors might deposit on the coils and alter their performance or damage the internal plastic parts of the unit.
- If installation of unit includes using a lift, insert a plywood sheet between the unit and the lift forks to avoid damaging unit. (Figure B.5.1)
- It is recommended to locate the unit near one side of room to ensure optimum air distribution. (Figure B.5.2)
- Generally, the best louver position is the one which allows air diffusion along the ceiling. Alternative positions can be selected.
- Confirm sufficient space is provided to allow removal of panels from the ceiling in the selected position and to allow enough clearance for maintenance and servicing operations.

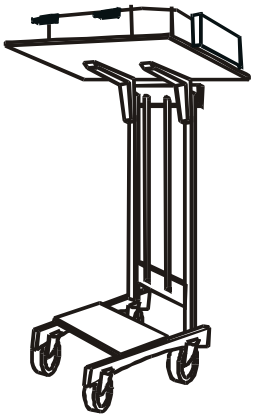

Figure B.5.1

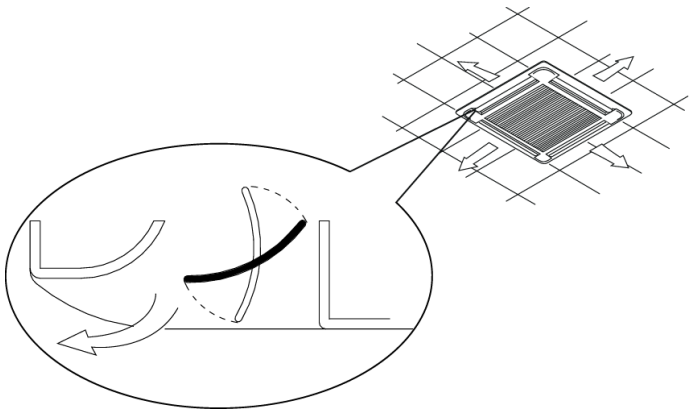

Figure B.5.2

B.6. False Ceiling Clearance

- Verify inlet and outlet grilles are not obstructed to ensure proper air flow.
- Confirm location allows condensate to be properly drained.
- Confirm height between the bottom of upper deck and top of ceiling is sufficient for installation. (Figure B.6.1)
- Ensure there is sufficient space around the unit to provide installation and service.

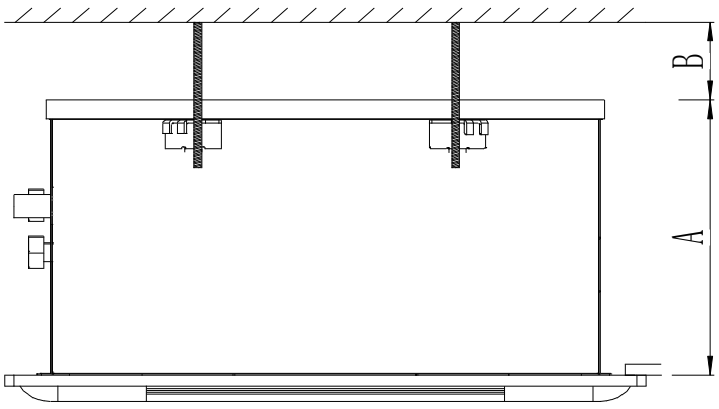

Figure B.6.1

Model	A (mm)	B (mm)
FCSD-03/04/09	Maximum: 265	Minimum 10
FCSD-06/08/08R2/12/16 FCSD(H)-16/18/20/24	Maximum: 305	Minimum 10
FCSD(H)-09/10/12	Maximum: 275	Minimum 10

B.7. Condensate Drainage Connection

- The unit is fitted with a condensate pump with a maximum of 500mm lift.
- The unit is provided with 25.4mm diameter ABS drainage outlet.
- Confirm drain outlet has not been damaged before connecting drain pipe to unit.
- Discharge pipe may be connected with hose clamp. (Figure B.7.1)
- The drain must be installed with a downward slope.
- Insulate drain pipe after installation.

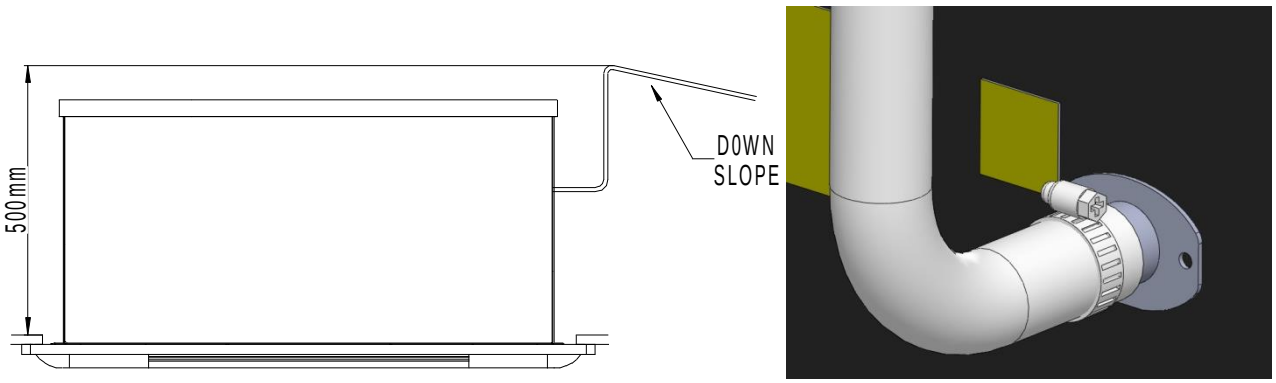

Figure B.7.1

Caution

Factory-provided drain outlet is ABS. Using an unsuitable glue may damage the drainage outlet.

B.8. External Drain Pan Installation

1. Align the two screw holes in the fixing plate to the two holes in the external drain pan. (Figure B.8.1 and B.8.2)
2. Make sure the drain pan is horizontal.
3. Tighten the two screws while making sure the external drain pan is installed flush against the fixing plate. (Figure B.8.3)
4. When the installation is completed, it is necessary to wrap the connecting pipe with thermal insulation to prevent condensation on ceiling tiles.

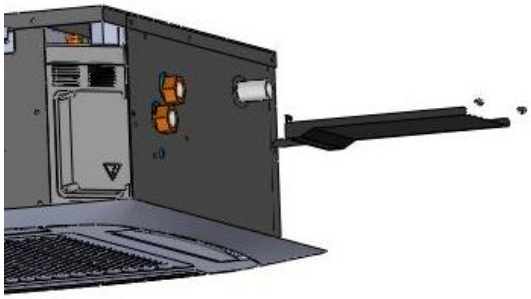

Figue B.8.1

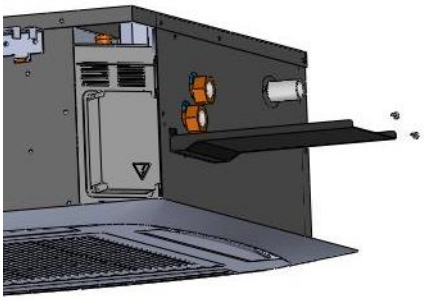

Figure B.8.2

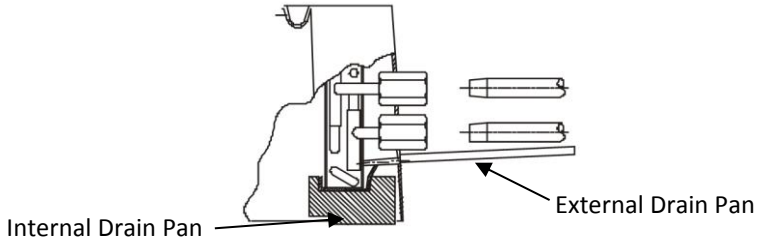

Figure B.8.3

B.9. Water Connections and Valve Configurations

The cassette unit uses is provided with 3/4” water piping connections with gaskets.

- ~S: Units are compatible with:
  230VAC 2-way and 3-way on/off valves (thermoelectric or electric motor-driven actuation), with OPEN/CLOSE state actuation.

- ~W: Valve control requires external wired thermostat. See thermostat manual for details.

- Connections:
  Review below table for information on valve diameter.

Model	External valve information	
	Type	Connector dia. (inch)
All models	2-way & 3-way	3/4”

- ON/OFF valve installations:
  See drawings of external valve installation below by model type.

For 2-pipe systems

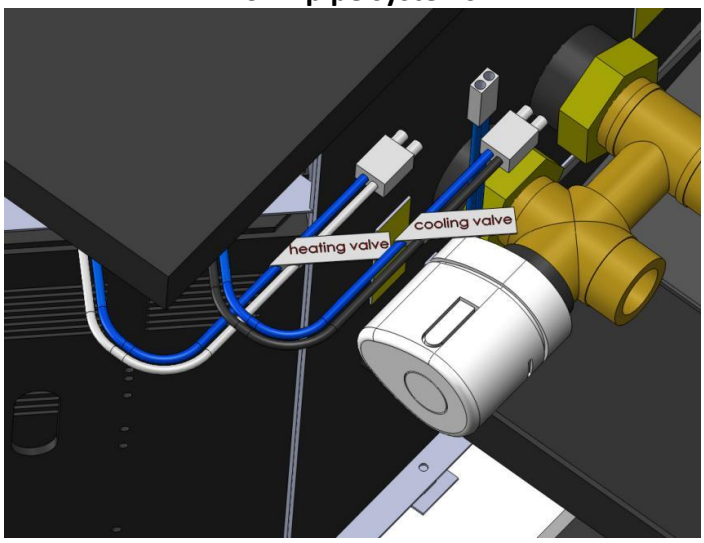

For 4-pipe systems

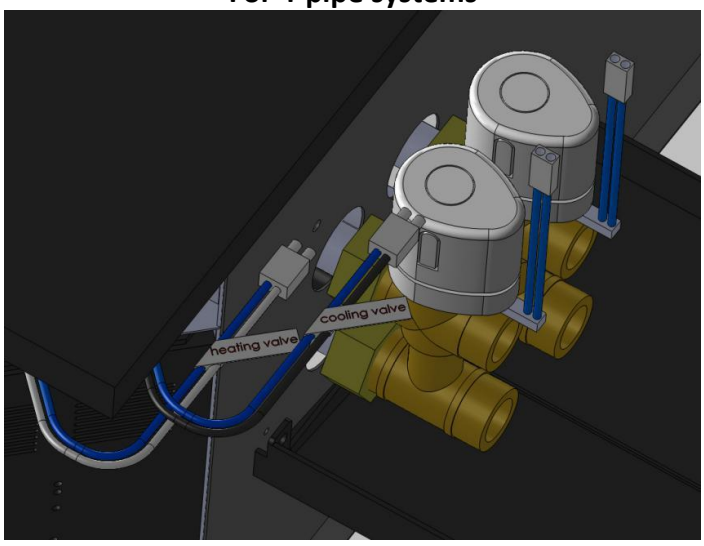

B.10. Fresh Air Renewal Connection

The fresh air system for cassette unit allows up to 15% of airflow (maximum air flow per connection is 100m^3/h) to be fresh air intake (per connection). Maximum 2 fresh air connections per unit are allowed.

1. The corners of the cassette allow separate ductwork to be installed for outside air intake (Figure B.10.1)
2. Cut and remove thermal insulating material.
3. Open the mounting plate (Figure B.10.2 and Figure B.10.3)
4. Install the flange to casing and attach with 2 screws. (Figure B.10.4 and B.10.5)

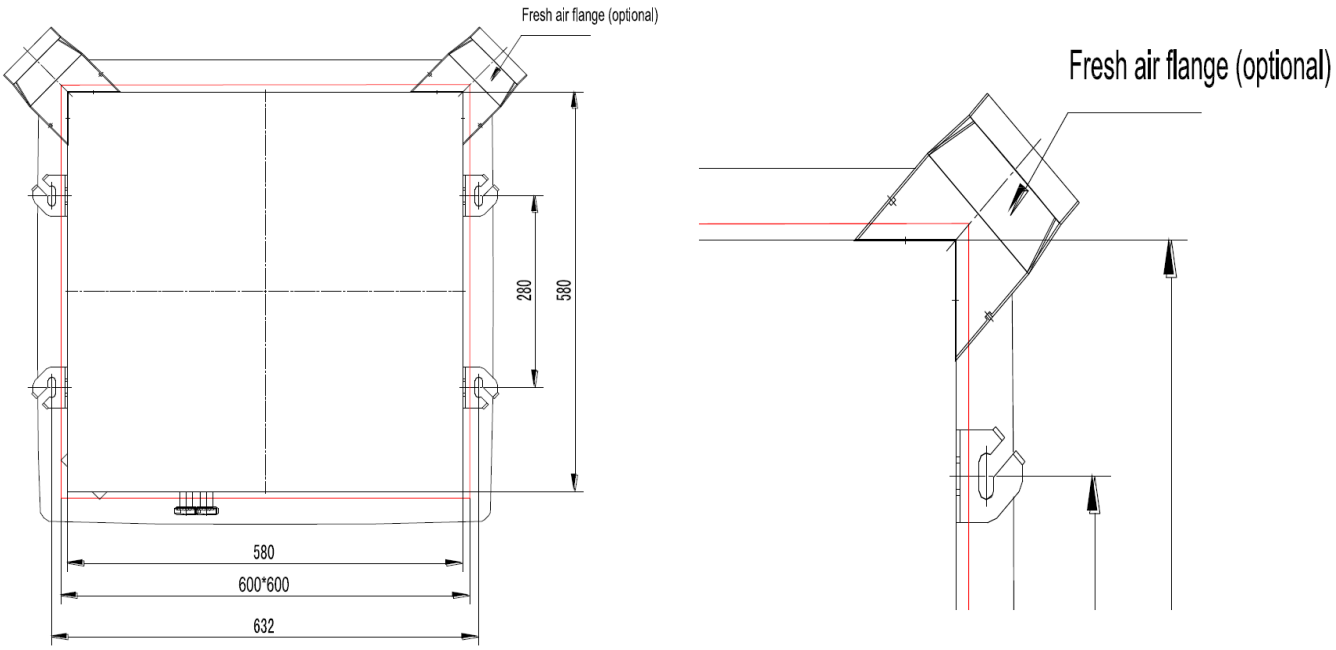

Figure B.10.1

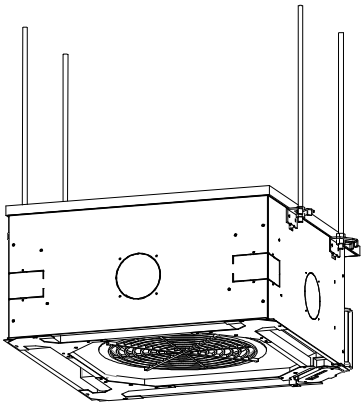

Figure B.10.2

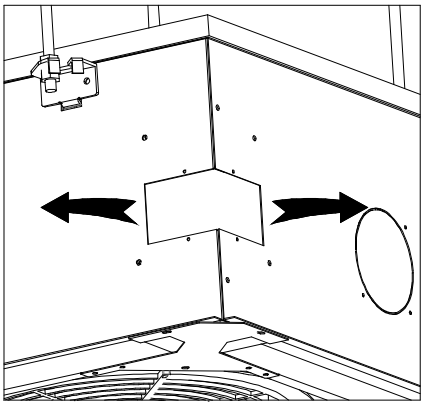

Figure B.10.3

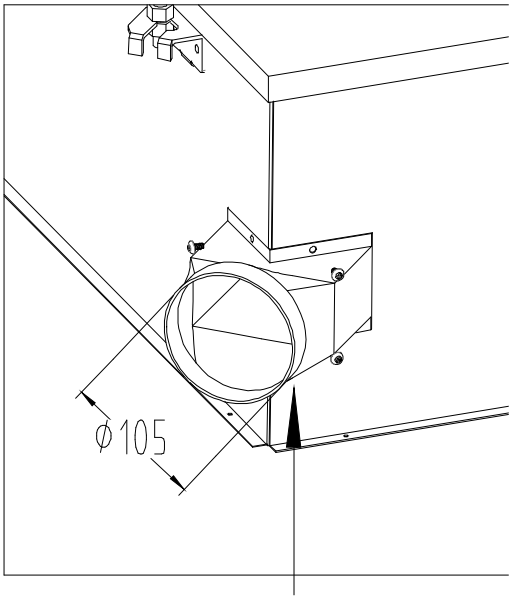

Figure B.10.4

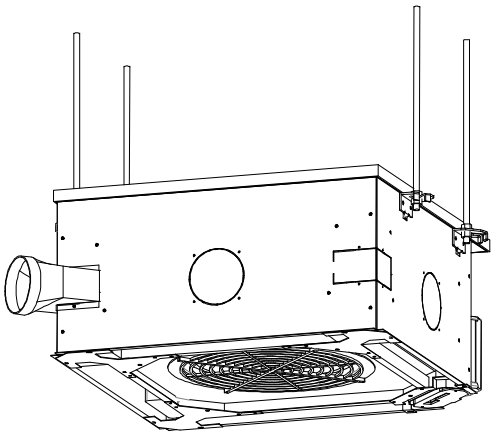

Figure B.10.5

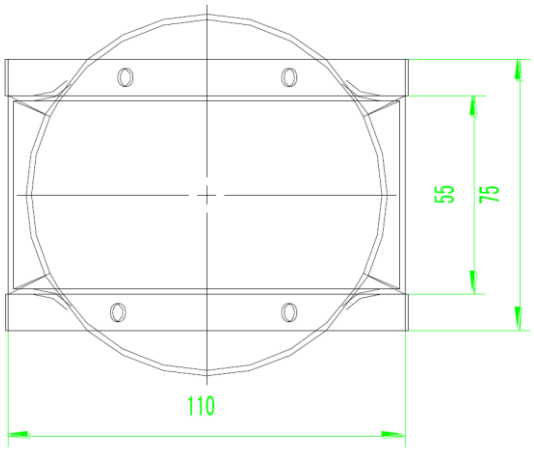

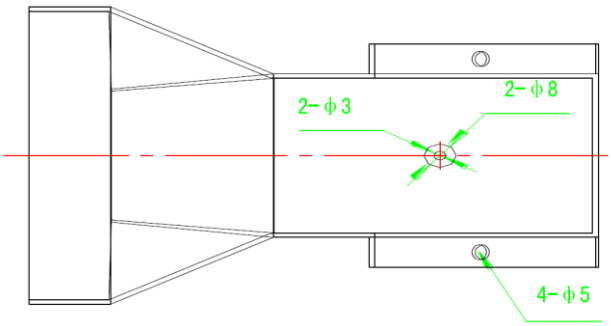

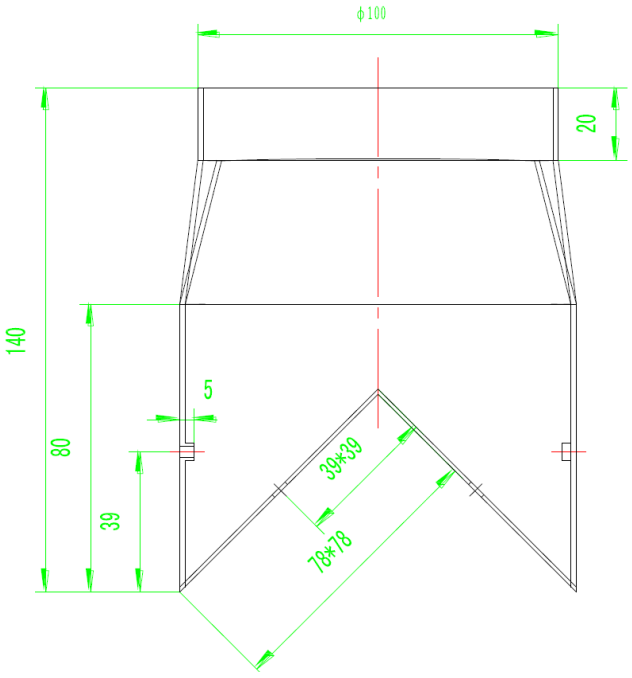

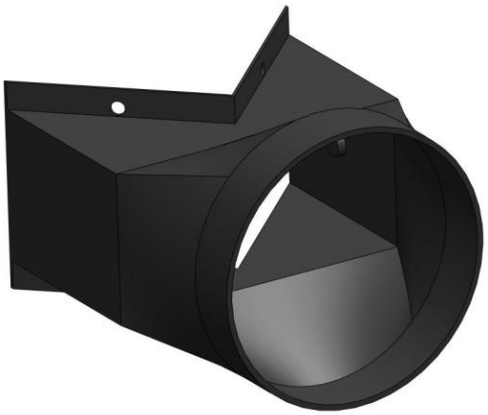

Fresh Air Flange dimension

(All dimensions shown in mm)

B.11. Branch Duct Connection (optional part)

- The side opening allows branch duct work to be installed.
- Dimensions and location for connection are shown in Figure B.11.1 and Figure B.11.2.
- Flanges and conduits can be installed to casing.
- Conduits can be flexible polyester with spring core or corrugated aluminum externally insulated.
- Branch duct flange and blanking plates are available as separate accessories items.

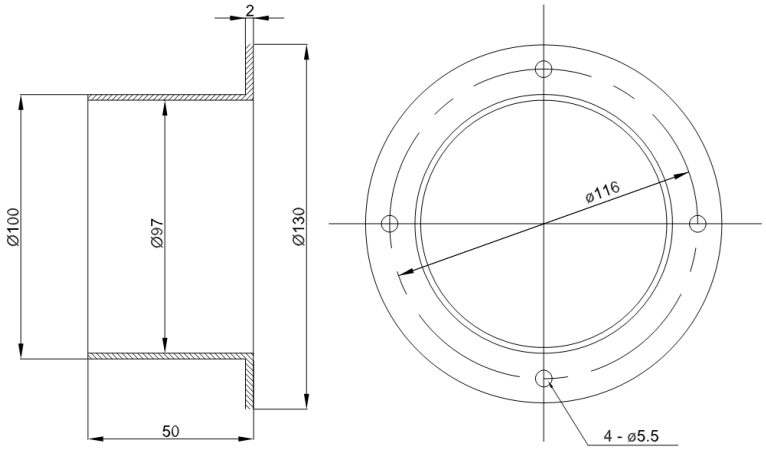

Figure B.11.1

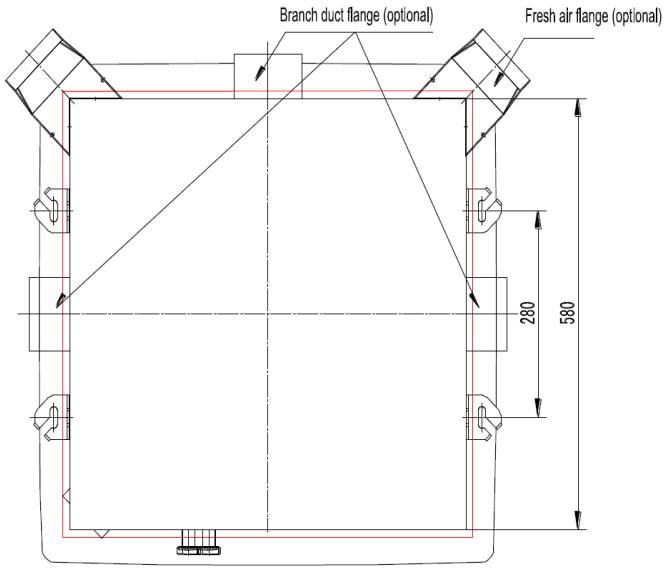

Figure B.11.2

Installation Procedures:

1. Look for the yellow sticker on the casing for the location of branch duct connections.
2. Use a cutter and follow along the pre-cut circular marking as shown and trim off the insulation.
3. Knock out the pre-cut hole.
4. Connect the flange to the opening with 4 tapping screws (Ø3 x 12 mm).

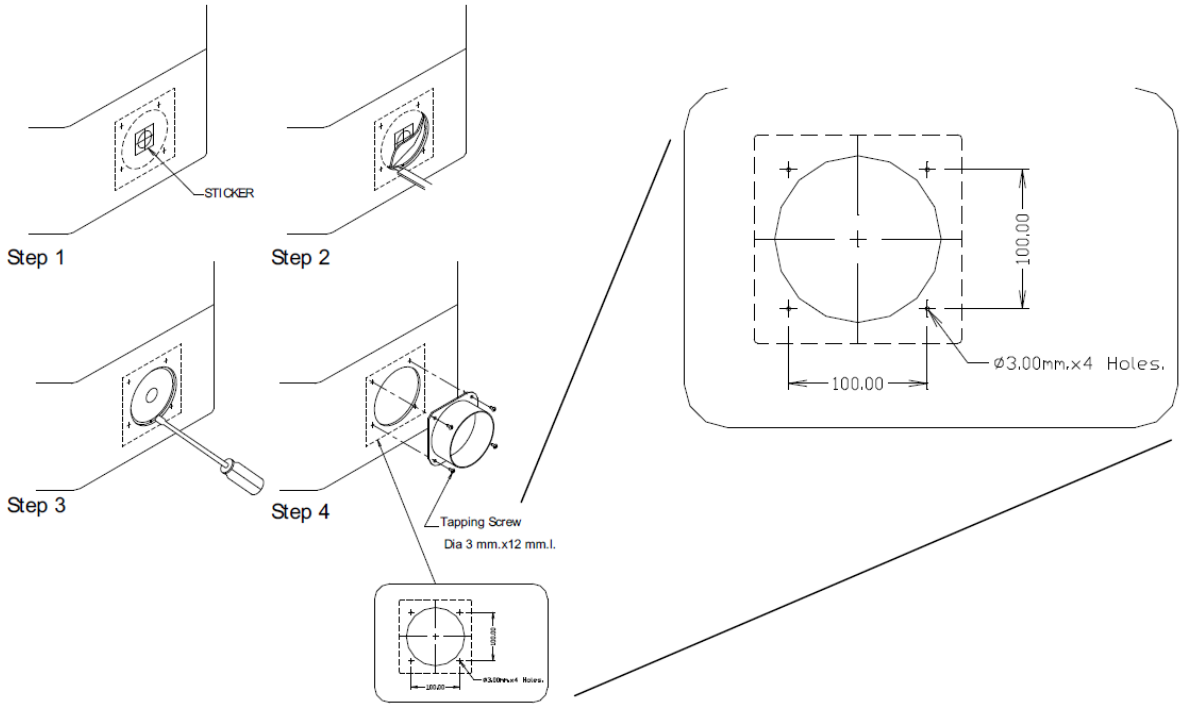

Figure B.11.3

(All dimensions shown in mm)

B.12. Suspension Bolts Layout and Ceiling Opening

Using installation template, remove and/or modify ceiling panels and install the suspension bolts as in the images below.

FCSD-03/04/06/08/08R2~

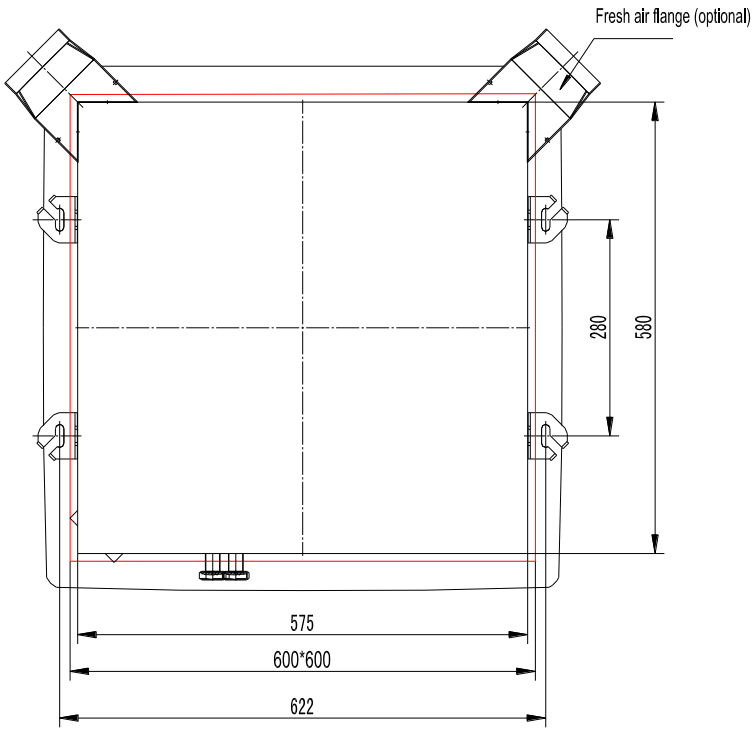

600 x 600: Dimensions for opening
622 x 280: Suspension Bolts

FCSD-09/12/16~

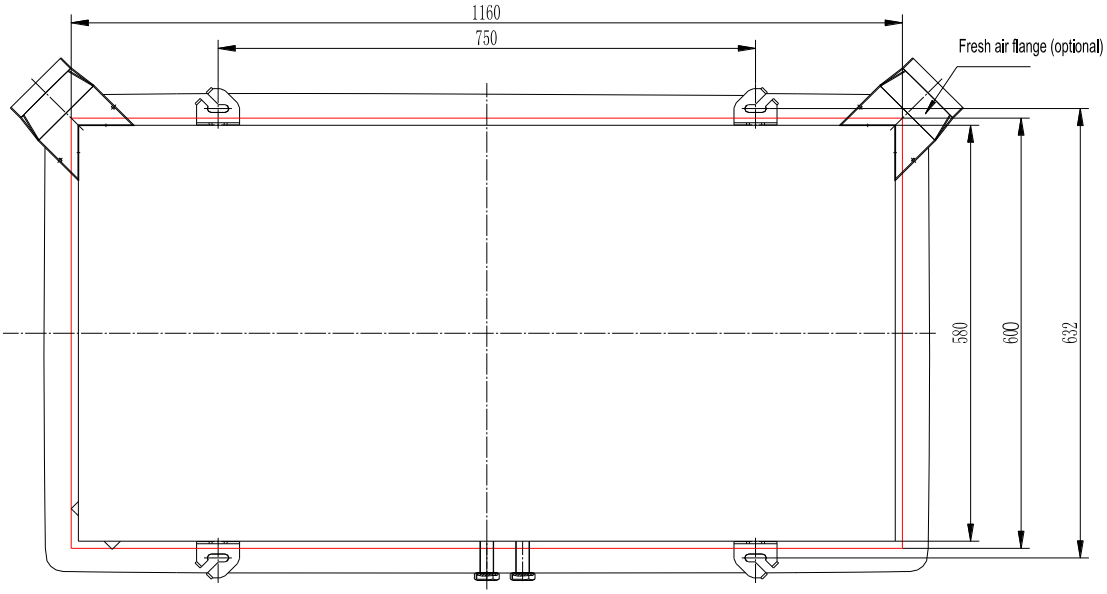

600 x 1160: Dimensions for opening
750 x 632: Suspension Bolts

FCSD(H)-09/10/12~

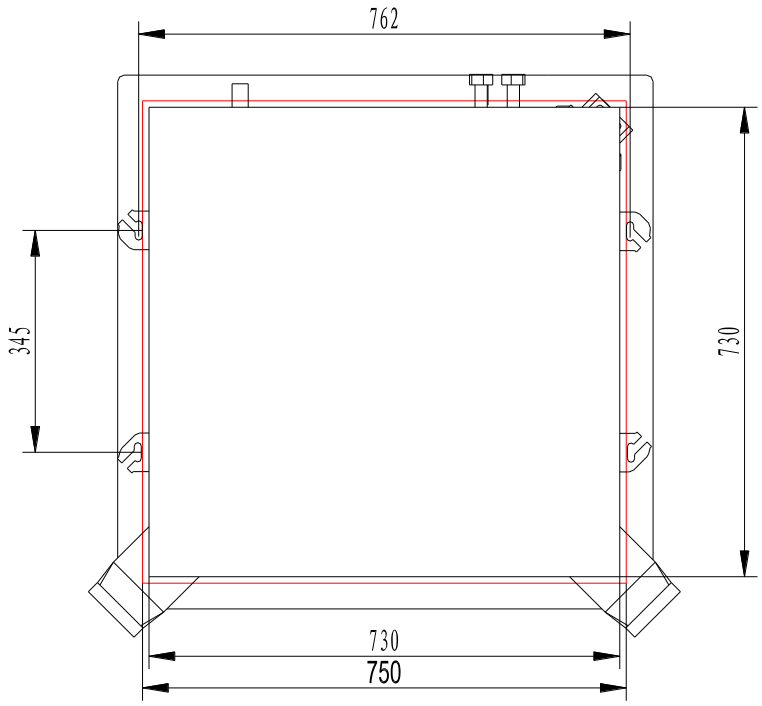

750 × 750: Dimensions for opening
345 × 762: Suspension Bolts

FCSD(H)-16/18/20~

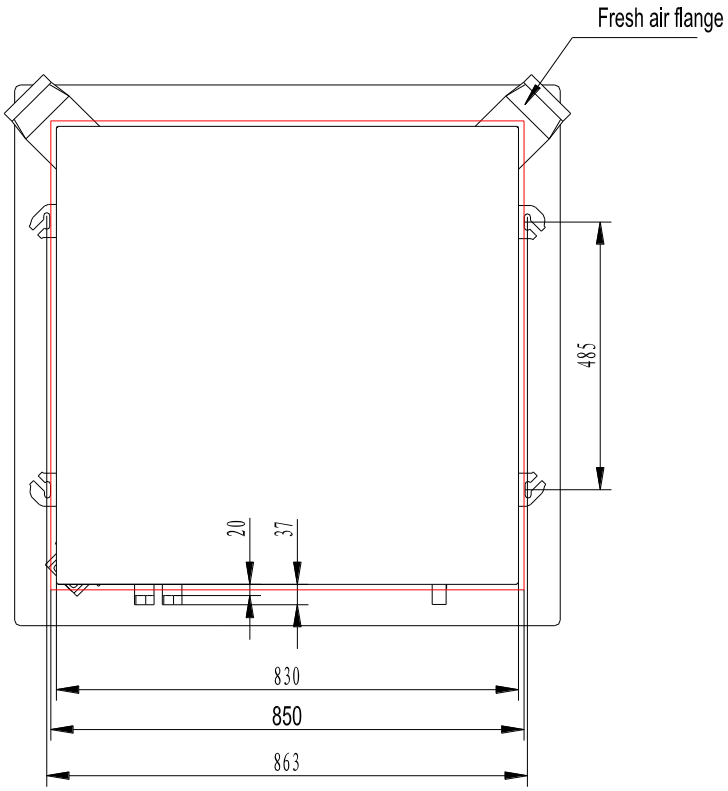

850 × 850: Dimensions for opening
485 × 863: Suspension Bolts

(All dimensions shown in mm)

FCSD(H)-24~

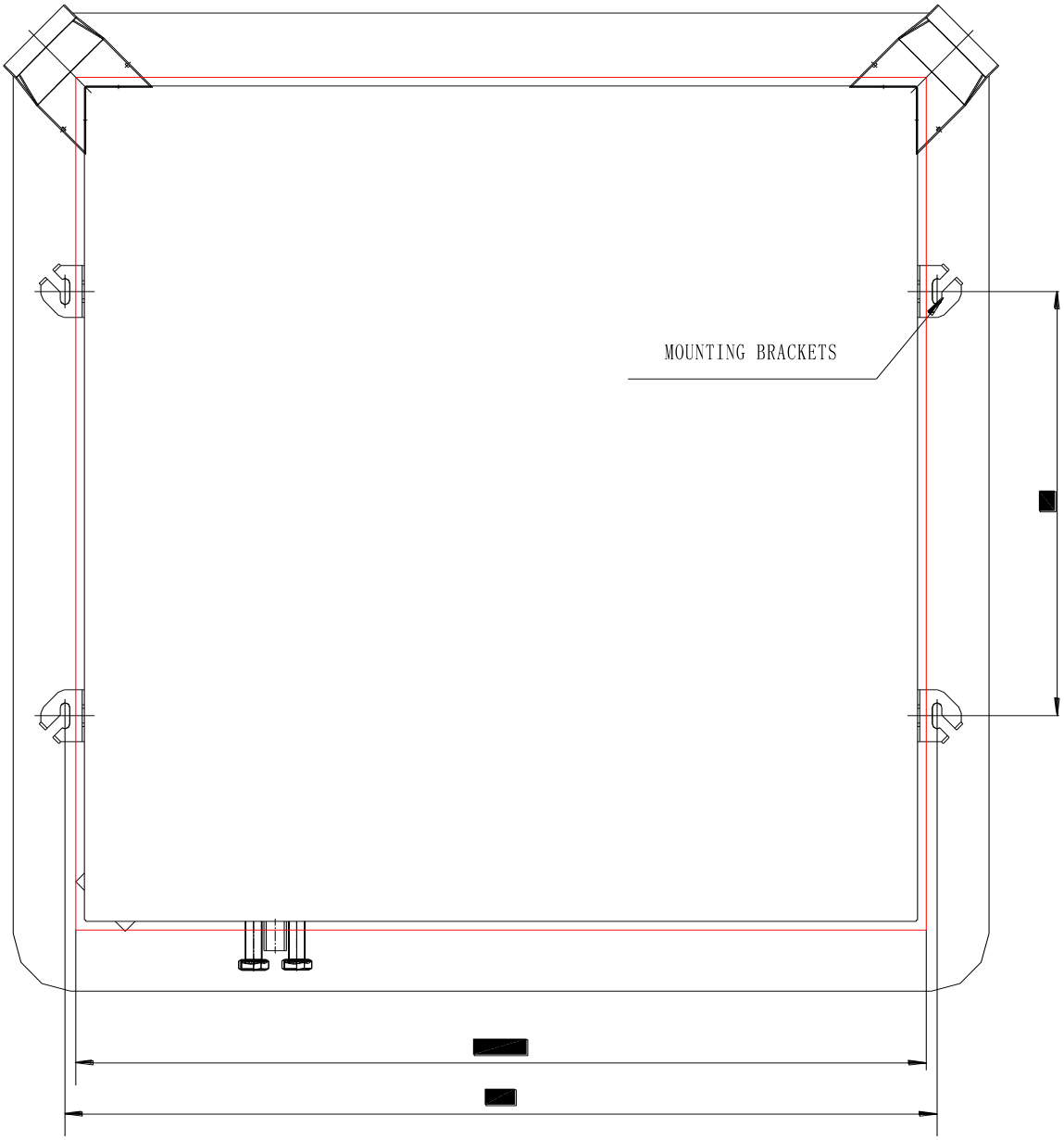

985 x 985: Dimensions for opening
1010 x 490: Suspension Bolts

(All dimensions shown in mm)

Installation Procedures:

1. Lift unit (without front panel) with care by four corners only. Do not lift unit by the condensate drain discharge pipe or piping connections.
2. Incline the unit and insert it into ceiling. Insert support rods into the bracket slot.
3. Remove some T bars if necessary to achieve enough clearance.
4. Line up the unit to the supporting bars of the ceiling by tightening the nuts and counter nuts of the suspension rods
5. After connecting the condensate drain piping and piping connections, confirm fan coil is level.
6. Check to ensure the unit is level. Drain will at the lowest point when unit is level.
7. Tighten nuts on the suspended rods.

For Single Fan Unit:

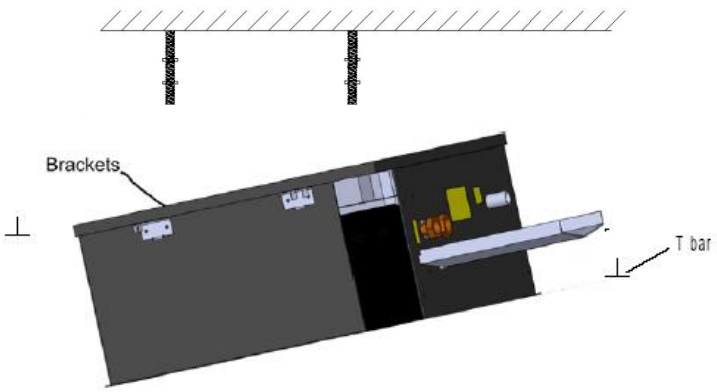

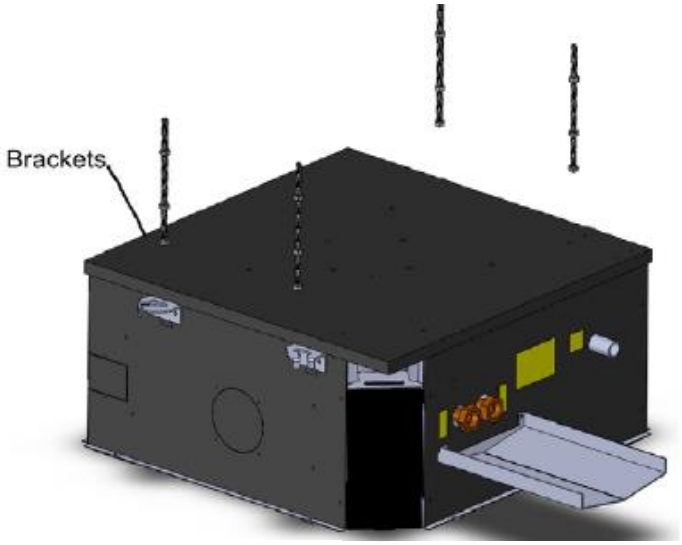

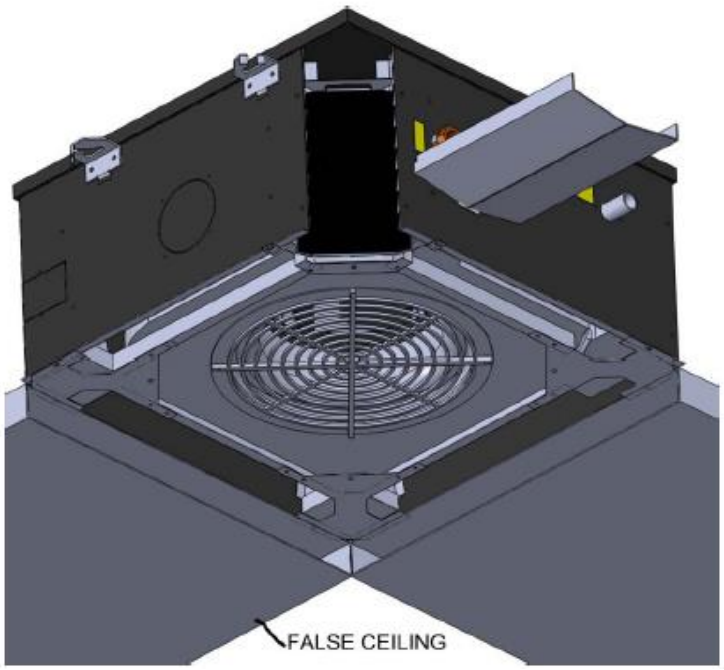

Clearance between the unit and ceiling

MODEL	All single fan models
Clearance	3mm

For Twin Fan Unit:

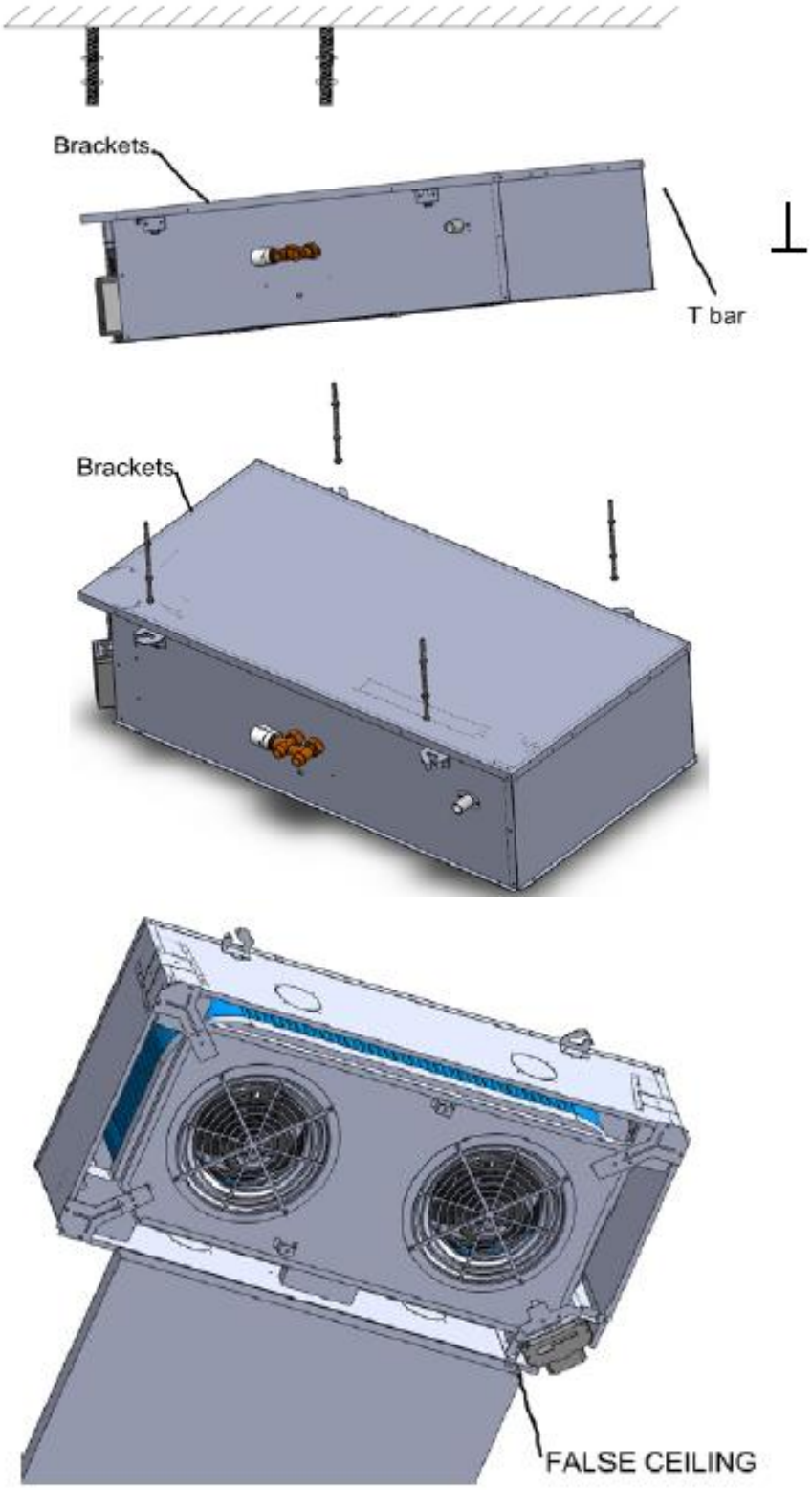

Clearance between the unit and ceiling

MODEL	All twin fan models
Clearance	3mm

B.13. Interconnecting Wiring

- It is recommended shielded line voltage and low voltage cables in electrically noisy areas.
- Do not install fan coil unit in a location where electromagnetic waves may be directly emitted towards infra-red receiver on the unit.
- Install the unit and components as far away as is practical (at least 5m) from the electromagnetic wave source.
- Use shielded sensor cable in where electromagnetic waves exist.
- Install a noise filter if necessary.

IMPORTANT NOTES

Please ensure the cable of the main powers supply is longer than 500mm from the control box terminal block. This is to ensure the control box can be slid out easily during maintenance activities.

Always take safety precautions before wiring for mains supply. See section B.1, Safety Precautions.

Wiring Procedures:

1. Open the terminal block cover by removing the 4 screws.
2. Connect power cable to the terminal according to the wiring diagram.
3. Connect room temperature sensor and coil temperature sensors to control box.
4. Connect stepping motors.
5. Connect receiver display.
6. Connect wired wall-pad controller (optional).
7. Slide the control box into the unit casing and attach with screws.

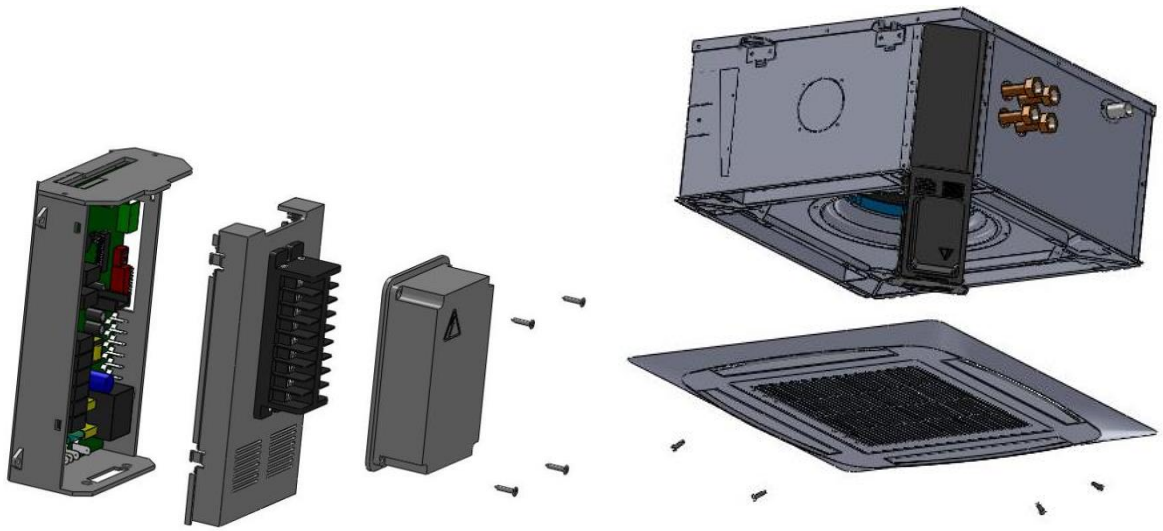

B.14. Mounting Front Panel Assembly

1. Remove return grille from front panel.
2. Move the front panel to the unit casing.
3. Tighten 4 partially threaded screws to attach the front panel as shown in Figure B.14.1 and Figure B.14.2. The front panel does not move upwards excessively because the screws are not fully threaded (see below Figure B.14.3). Therefore, the height of false ceiling and installation height should be measured accurately to ensure that there is no gap between the false ceiling and the front panel.
4. Install the grille back to front panel.

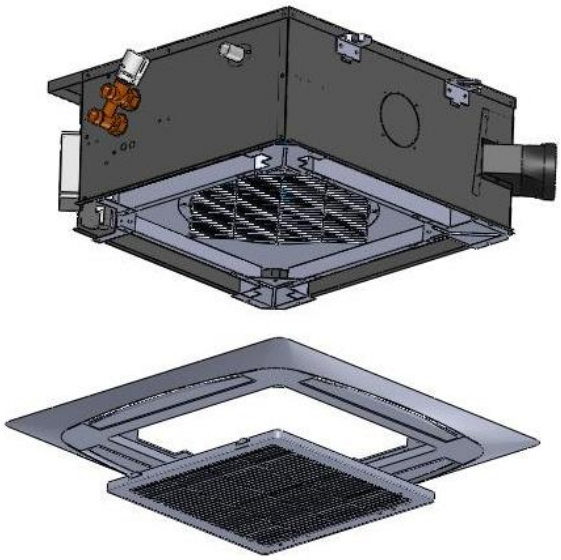

Figure B.14.1

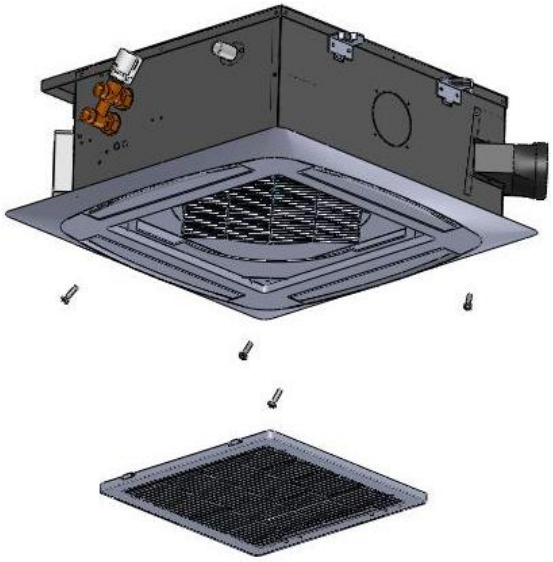

Figure B.14.2

Figure B.14.3

B.15. Start-Up

- The unit should not be started up until the system piping has been cleaned and all the air has been purged.
- Check condensate drain pipe slope.
- Confirm the condensate drain pump in good working order.
- Confirm float switch is not loosen or become dislodged during shipping. Use the following steps to confirm pump functionality:
  1. Install cassette unit in an absolute horizontal position.
  2. Fill the internal drain pan by pouring water through the external drain pan to confirm drain pump is working.
  3. Confirm flow of water through condensate drain pipe. If the water is not expelled, verify float switch is has not been damaged.
  4. Verify air filter is clean and properly installed.
  5. Ensure that voltage and current values correspond with the unit nameplate values; check electrical connections.
  6. Verify louver is open.

C. **Maintenance**

- Turn off the main power switch before performing any service or maintenance operations. Please see section B.1. “Safety Precautions”.
- The air filter is made of acrylic fiber and is washable in water.
- Open the intake grille by releasing the two fasteners to remove filter.
- Check the filter before the operating season and then periodically while in use; clean or replace as necessary.

C.1. For Units Out Of Use for Extended Period

Prior to restarting the unit:

- Clean or replace the air filters.
- Check and remove any obstruction from the external drain pan and the internal drain pan.

C.2. Extra Maintenance

- The electrical panel is easily accessible by removing the cover panel.
- Inspection, servicing, and replacement of internal components such as coils, condensate pump, float switch and drain pan are accessible via cover panel.
- Be aware of water spillage when removing the condensate drain pan
- Release the drain pan fixing screws and remove the condensate drain pan with care.

C.3. Filter Removal

1. Unlock the two fasteners on the front panel.
2. Open the grille downward with care.
3. Pull the filter out along the slot.
4. Clean the filter and reassemble.

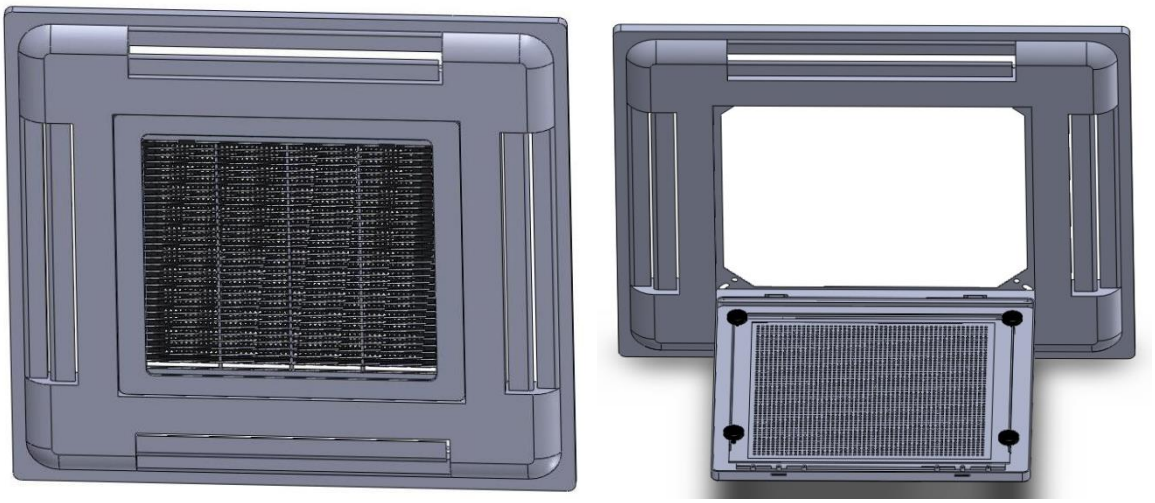

C.4. Air Vent and Water Purge Valve

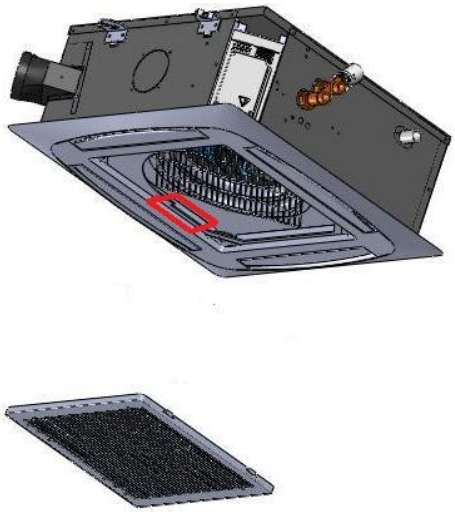

Step 1: Remove grille, access the area indicated by the red line.

Step 2: Open air vent and water purge valve by turning the knobs.

C.5. Fan Speed Customization

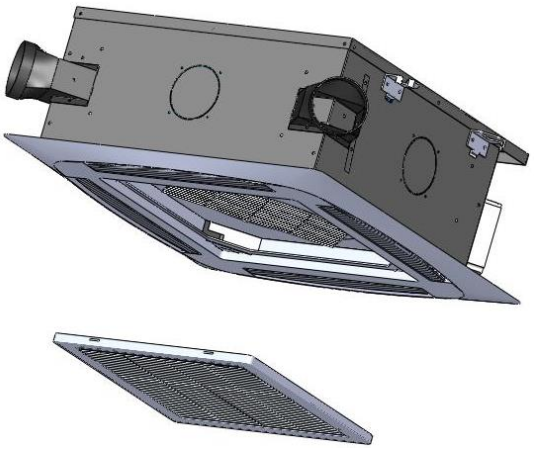

Step 1: Remove grille to access the connection wires area.

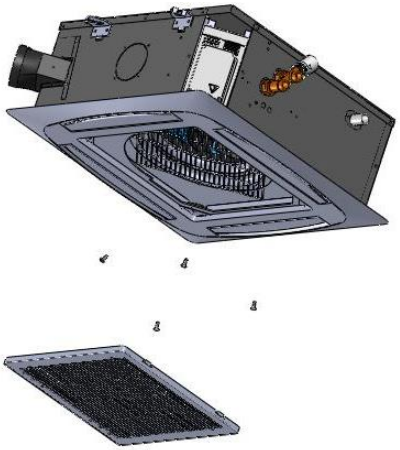

Step 2: Remove the 4 screws of the inner grille.

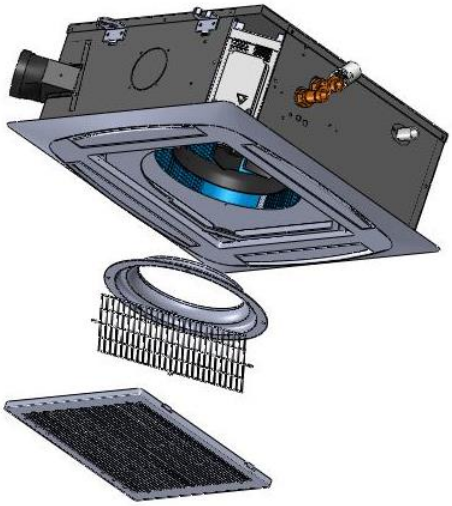

Step 3: Remove inner grille and venture

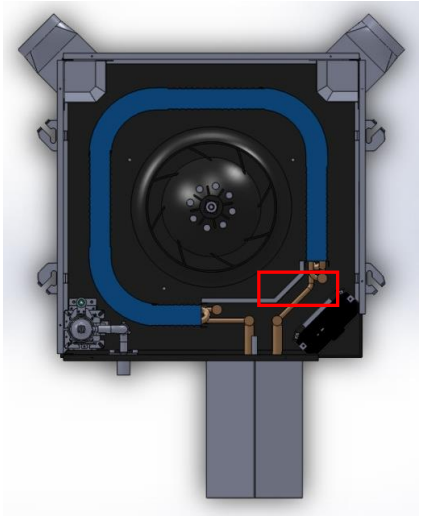

Step 4: Locate the Fan Speed Terminal as red line indicated.

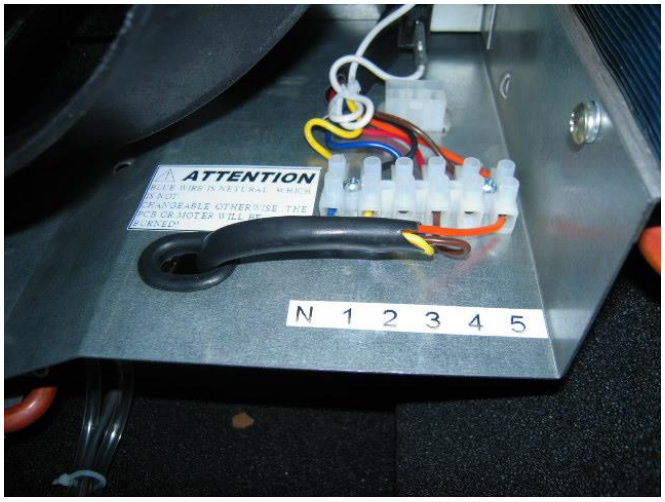

Step 5: Customize fan speed by rewiring the terminal block shown in above picture.

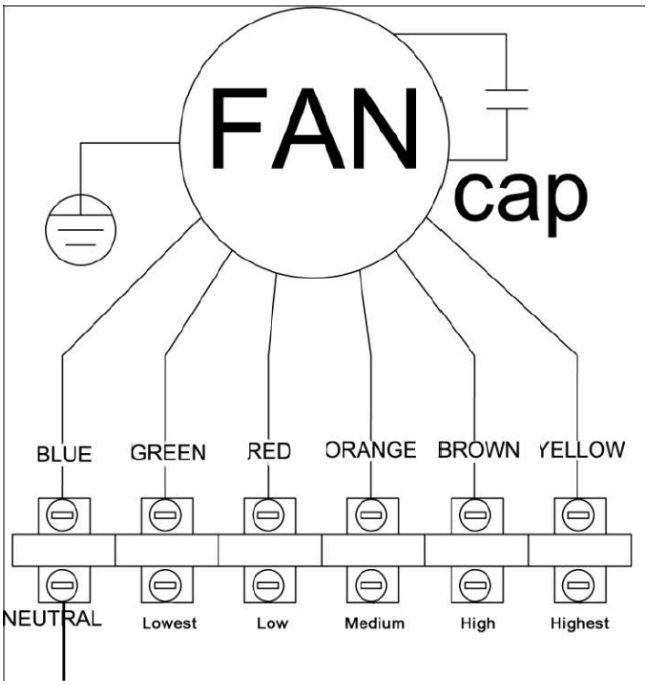

Step 6: The 3 output wires from Control PCB for fan speed (labeled LF / MF / HF) may be rewired to any of the 5 input terminals for Motor. (labeled 1, 2, 3, 4, 5) ONE PCB output wire to ONE motor input terminal.

C.6. Motor and Fan Blower Replacement

Refer to Section C.5. for Steps 1, 2 and 3.

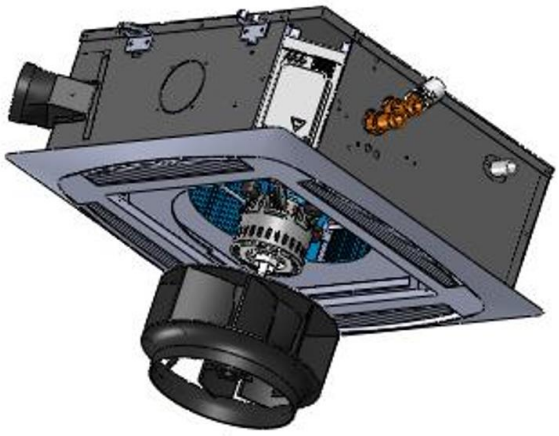

Step 4: Use a spanner to remove the fan blower.

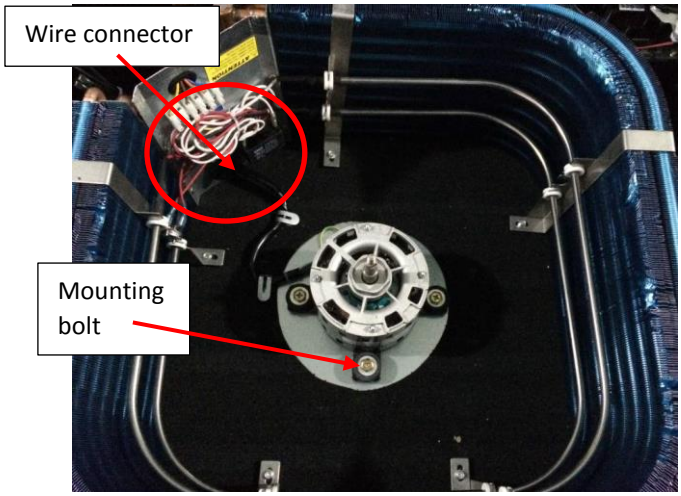

Step 5: Remove motor by undoing the 4 bolts. Disconnect wire connector and replace the motor.

C.7. Condensate Pump Kit Replacement

Refer to Section C.5. for Steps 1, 2 and 3.

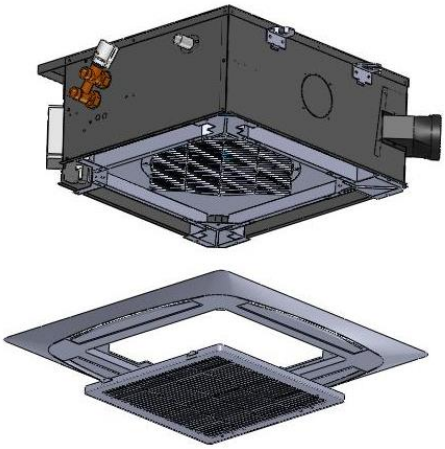

Step 4: Remove front panel and disconnect stepping motor and IR receiver.

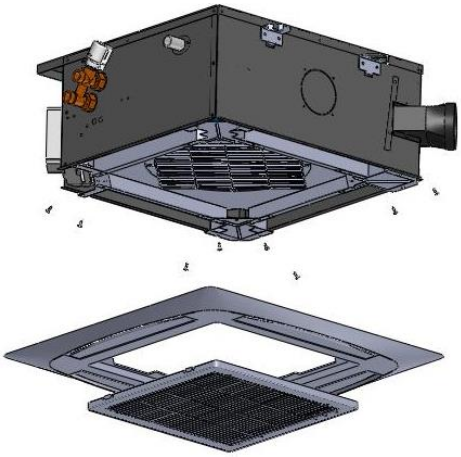

Step 5: Unscrewing the 8 screws as shown above.

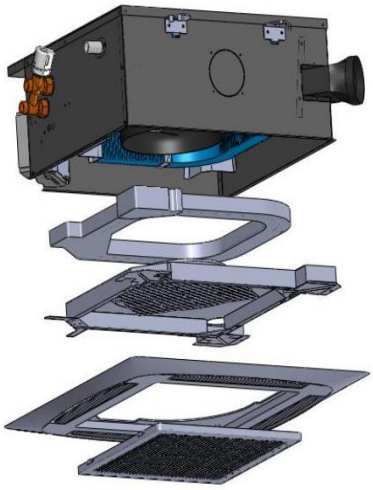

Step 6: Remove the drain pan and internal drain pan.

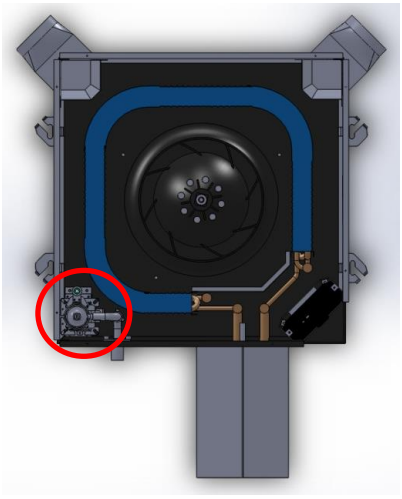

Step 7: Remove the pump kit (including Drain pump and Float switch) and replace it.

C.8. Control Box Replacement

Refer to Section C.5. for Steps 1, 2 and 3.

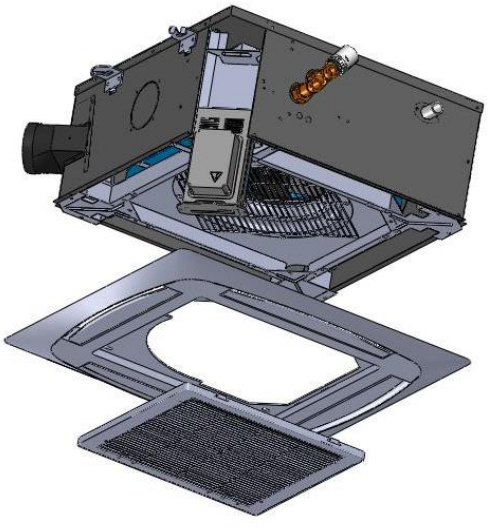

Step 4: Remove 2 screws from the control box and slide it out.

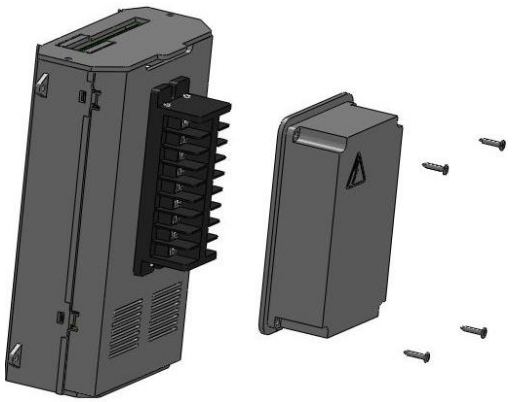

Step 5: Remove the terminal cover by undoing the 4 screws. Disconnect wiring on the terminal. Replace with a new control box and reconnect the wires.

C.9. Electric Heater Installation

Refer to Section C.7. for Steps 1 to 6.

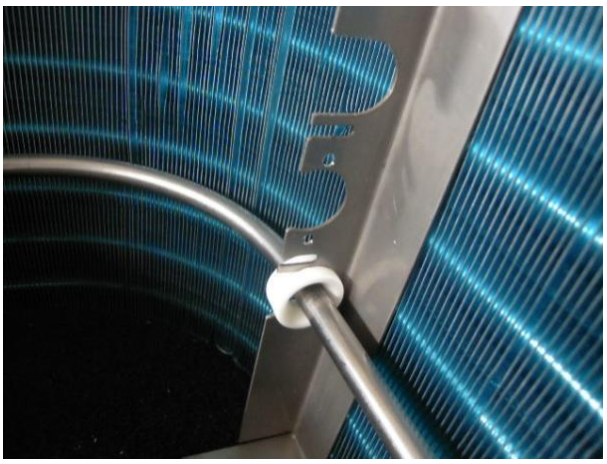

Step 7: Snap the insulated ring of the electric heater to the electric heater mounting.

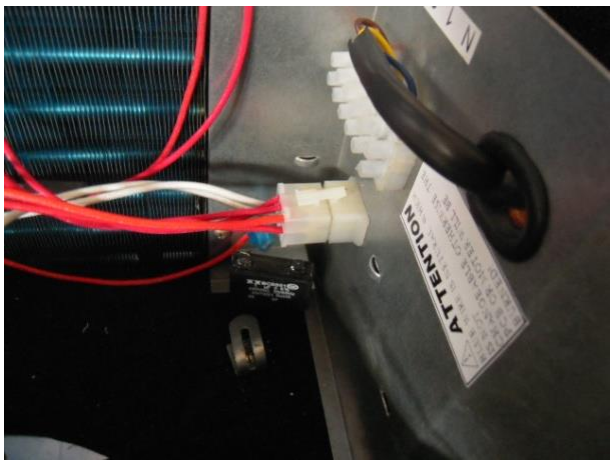

Step 8: Plug in the connector of electric heater.

REMARKS

If the cassette is installed with an Electric Heater, do not select motor speed 1 as LF on the control PCB. Refer to C.5. to change motor speed.

C.10. Transformer (optional) Installation

Refer to Section C.7. for Steps 1 to 6.

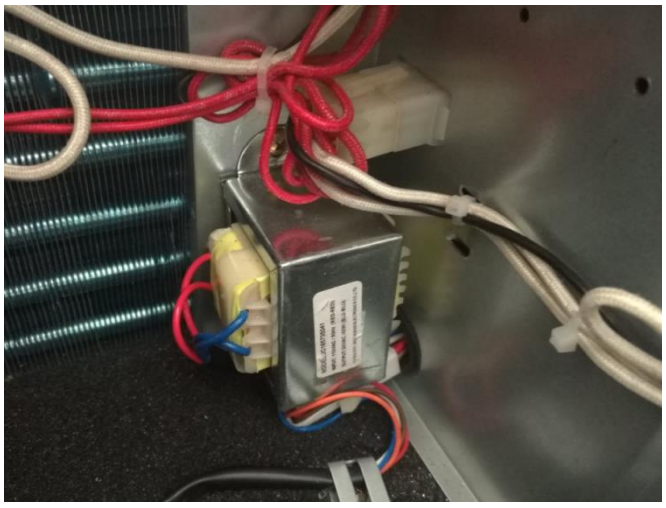

Step 7: 40 VA 24 VAC transformer installation.

Remark:

The transformer is optional for unit with W PCB, which is used to supply 24VAC power to thermostat and modulating valve.

It is not easy to install transformer on site. It is better to install it in the factory.

D. **Control Specifications: Complete Function PCB - S Control**

Abbreviations

Ts = Setting temperature
Tr = Room air temperature
Ti1 = Chilled water coil temperature
Ti2 = Hot water coil temperature
AUX1 = Hot water free contact
AUX2 = Chilled water free contact
MTV1 = Chilled water valve
MTV2 = Hot water valve

D.1. I/O Port Definitions

I/O		Code	2-Pipe	4-Pipe
Analogue Input	Return air Sensor	AI1	Return air temperature (Tr)	
	Chilled water Sensor	AI2	Chilled / hot water coil circuit (Ti1)	Chilled water coil circuit (Ti1)
	Hot water Sensor	AI3	N/A	Hot water coil circuit (Ti2)
Input	IR receiver	X-DIS 1	Digital communication port to LED display/IR receiver board.	
	Wired wall pad	TTL1	Digital communication port to wired wall-pad board.	
Digital input	Occupancy contact	PR1/PR2	This contact can be connected to occupancy sensor or BMS system. **DIP-SWITCH IS ON. (Window contact)** The contact is normally open. If the contact has been closed for 10 minutes, the unit will be shut down. When the contact is open again, the unit restarts. **DIP-SWITCH IS OFF. (Economy contact)** Cooling operation will only be activated when Tr - Ts ≥ 4ºC. If Tr<Ts, cool operation will be terminated. Heating operation will only be activated when Tr-Ts≤ -4ºC. If Tr>Ts, heating operation will be terminated.	
	Float switch	Float	Voltage-free (NC). The contact is closed before the float switch is turned on.	
	Electrical heater safety switch	EH	Voltage-free (NC). The contact is closed before the EH is turned on.	
Power input	Phase	L	Power supply to the PCB and all the loads connected to the voltage outputs.	
	Neutral	N	Power supply to the PCB and all the loads connected to the voltage outputs.	
	Earth	GND	Power supply to the PCB and all the loads connected to the voltage outputs.	
Voltage output	High fan speed	HF	Voltage output (L)	
	Medium fan speed	MF	Voltage output (L)	
	Low fan speed	LF	Voltage output (L)	
	Valve1	MTV1	Water valve Voltage output (L)	Chilled water valve Voltage output (L)
	Valve2	MTV2	Reserved	Hot water valve Voltage output (L)
	Water pump	WP	Voltage output (L), Power supply to condensate pump.	
	Voltage of electrical heater (Live)	L-EH	Voltage output (L), maximum 30A	
Output	Stepping motor	CN1, CN2	Power supply to louver stepping motors.	
	Cold water free contact.	AUX2	Voltage free contact. Maximum load 5A if powered.	
	Hot water free contact.	AUX1	Voltage free contact. Maximum load 5A if powered.	
	In Modbus signal	AB	Terminals for local network serial connection.	
	Out Modbus signal	AB		

D.2. Wiring Diagrams

D.2.1. Standard AC-S1 Control PCB

AC-S Unit Wiring with 1Ph EH scheme

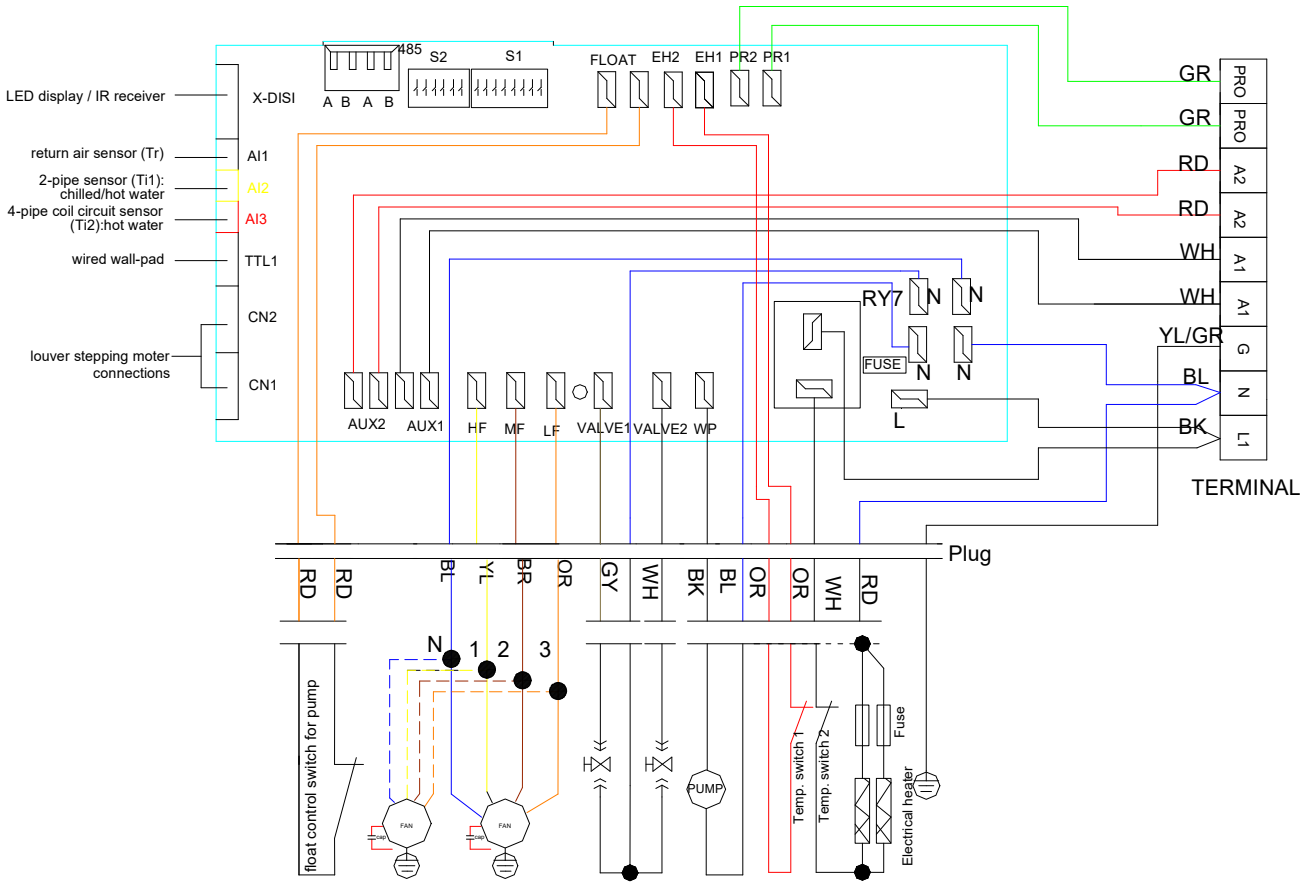

Legend: IPA19-DL-AC-S

DIPA-S1

SW1-5: set the unit address

SW6: set unit type: master or slave

Mode Configuration:

SW7=0;SW8=0;unit operates in cooling/heating.
SW7=0;SW8=1;unit operates in cooling/heating with booster EH.
SW7=1;SW8=0;unit operates in colling only.
SW7=1;SW8=1;unit operates in cooling with primary EH

DIPB-S2

SW1: Occupancy contact setting
SW2: Unit configuration setting:0=2-pipe system
1=4-pipe system
SW3: On/off vavle configuration setting:
0=no vavle;
1=with vavle;
SW4: Pheheat setting: 0=36 C; 1=28 C.
SW5:Reserved.
SW6:1 = last unit on RS485 communication bus;
0 = other than above.

L\N :Power supply
VALVE1: 230V On/Off valve output.
(2-pipe: Cooling / Heating); (4-pipe: Cooling)
VALVE2: 230V On/Off valve output. (4-pipe: heating)
WP: 230V condensate pump output.
RYL: 230 V Electrical heater output.
HF: 230 V Fan motor high speed output.
MF: 230 V Fan motor medial speed output.
LF: 230 V Fan motor low speed outpu
AUX1: Voltage free contact;ON=unit in Heating mode.
AUX2:Voltage free contact;ON=unit in Cooling mode.
PRO:Occupancy contact.
FLOAT: Float swith for pump.
EH: protectionl swith for elecctrical heater
CN1~2: Stepping motor output.
TTL: Wired wall-pad.
AI3: Indoor coil temperature sensor 2 (Ti2).
AI2: Indoor coil temperature sensor 1 (Ti1).
AI1: Return air temperature sensor (Tr).
X-DIS1: LED recevier output.
RS485: Serial BUS contacts.

D.2.2. Master Slave Networking Wiring Diagram

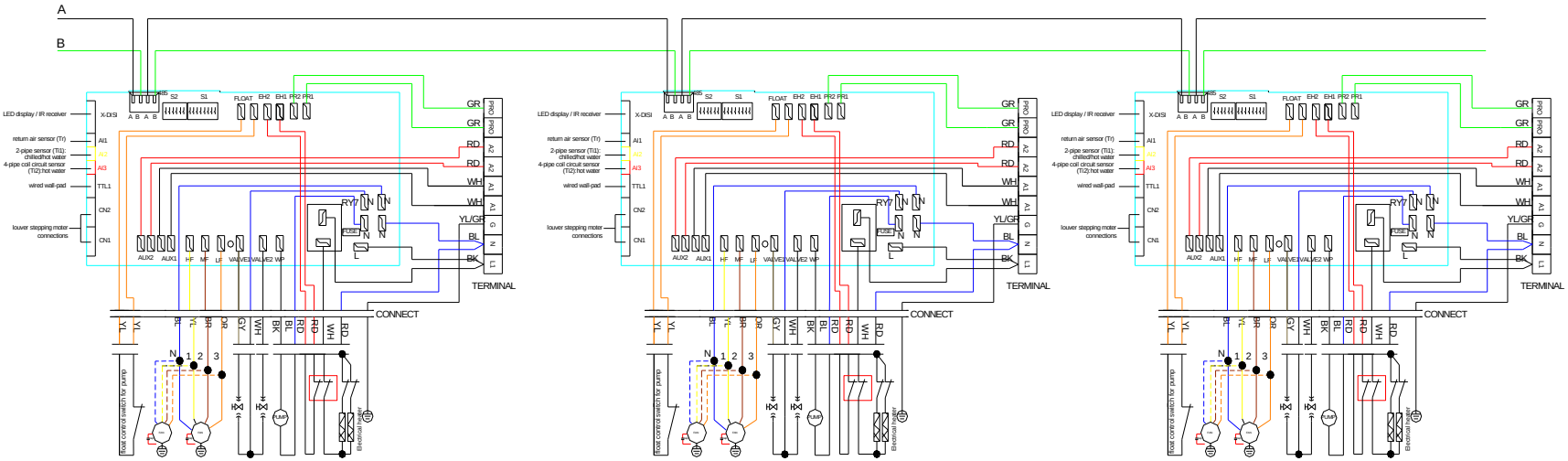

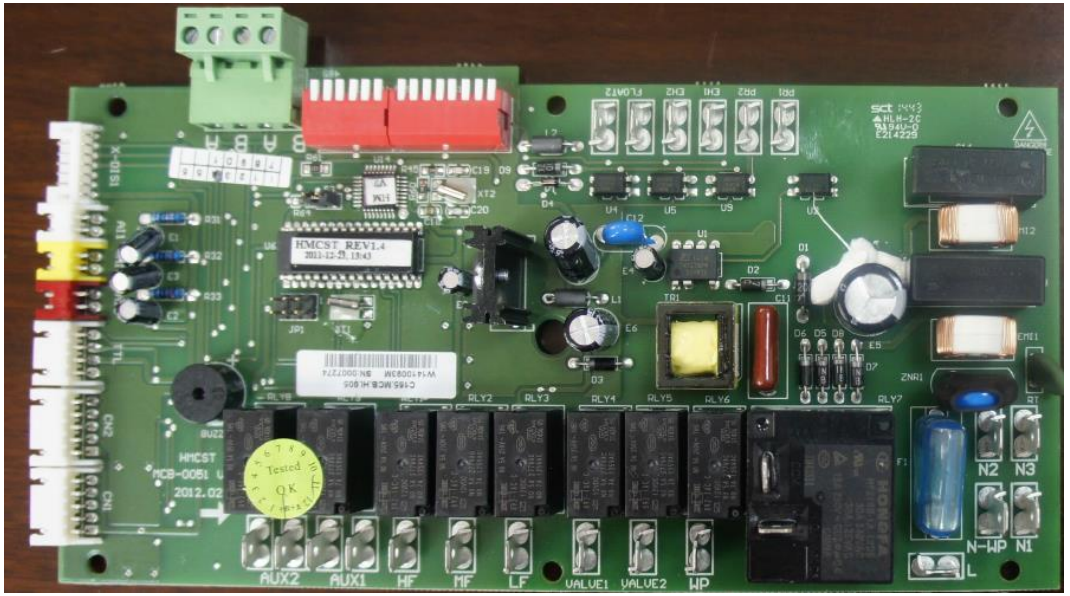

D.3. Configuration Settings

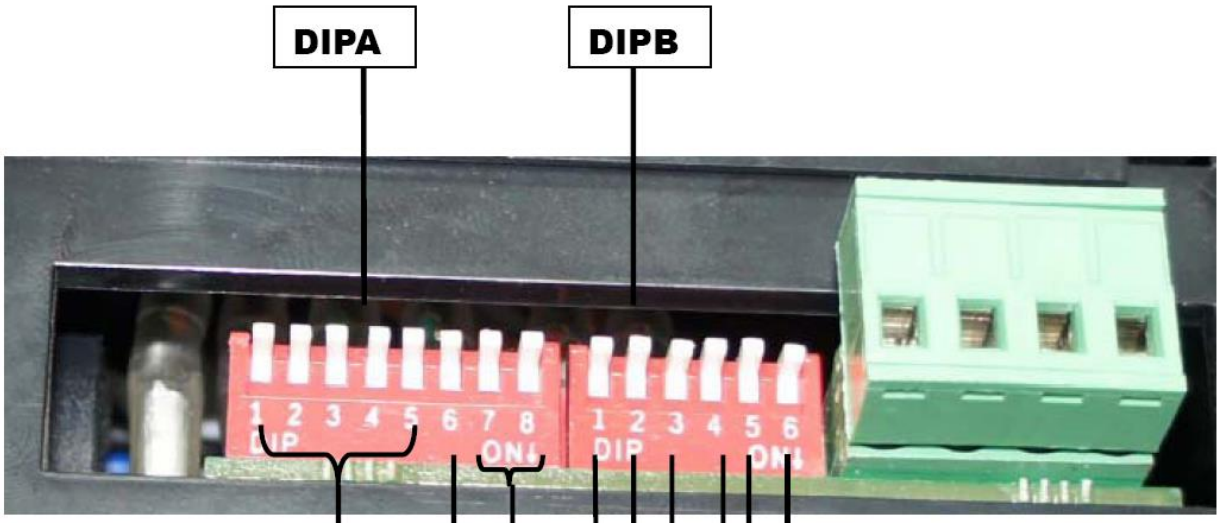

S1-S5 address setting

Master / slave setting
SW6=1 (ON) master
SW6=0 (OFF) slave

SW7/SW8 operating mode
SW7=0
SW8=0 Cooling and heating modes available

SW7=0 Cooling and heating modes available,
SW8=1 with EH functioning as booster

SW7=1
SW8=0 Cooling mode only available

SW7=1 Cooling and heating modes available,
SW8=1 with EH functioning as primary

SW6 RS485 termination setting
SW6=0 Other than below (Default setting)
SW6=1 Last unit on RS485 communication bus

SW5 Reserved

Preheat temperature setting
SW4=1 (ON) 28°C
SW4=0 (OFF) 36°C

230VAC on/off valve setting
SW3=1 (ON) With valve
SW3=0 (OFF) No valve

2-pipe/4-pipe system configuration
SW2=1 (ON) 4-pipe system
SW2=0 (OFF) 2-pipe system

PR-O contact setting
SW1=1 Window contact (remote on/off)
- When PROs closed for 10 minutes, unit enters standby mode.
- When PROs opened, unit resumes operation.

SW1=0 Economy contact

When PROs closed, dead-band condition is increased from "Tr=Ts+/-1" to "Tr=Ts+/-4".

Fan Coil Unit ON/OFF

There are 3 ways to turn the system on or off:

a) By the ON/OFF button on the remote handset or wired wall pad.

b) By the programmable timer on the handset or wired wall pad.

c) By the manual control button on fan coil unit.

d) By Modbus setting.

Auto Restart

The system uses a non-volatile memory to save the present operation parameters when the system is turned off or in case of system failure or cessation of power supply.

The restored parameter data-set depends on the type of user interface.

a) Handset only user interface:

When the power ON signal is received by the fan coil unit and no wired wall-pad is installed, the Mode, Fan Speed, Set temperature and Louver setting will be the same as the handset setting before the last power OFF.

b) Wall-pad only OR wall-pad and handset user interface:

When the power ON signal is received by the fan coil unit and a wired wall-pad is installed, the Mode, Fan Speed, Set temperature, Louver setting and Timer ON/OFF weekly program will be the same as the wall pad setting before the last power OFF.

D.4. Control Logic For 2-Pipe System

D.4.1. With Valve Configuration

COOL MODE

a) MTV2, AUX1 and electric heater are always off.
b) If Tr ≥ Ts + 1ºC (or + 4ºC if economy contact is activated), then cool operation is activated and MTV1 and AUX2 are turned on. Indoor fan runs at set speed.
c) If Tr < Ts, then cool operation is terminated and MTV1 and AUX2 are turned off. Indoor fan runs at set speed.
d) The range of Ts is 16 - 30ºC
e) Indoor fan speed can be adjusted to low, medium, high and auto.
f) When turned on, MTV1 requires 30 seconds before it is fully open.
g) When turned off, MTV1 requires 120 seconds before it is fully closed.
h) When the unit is turned off, the indoor fan will shut down after 5 seconds.

LOW TEMPERATURE PROTECTION OF INDOOR COIL

a) If Ti1 ≤ 2 ºC for 2 minutes, then MTV1 and AUX2 are turned off. If indoor fan is set for low speed, then it will run at medium speed. If it is set at medium or high speed, then it will keep running at the same speed.
b) If Ti1 ≥ 5ºC for 2 minutes, then MTV1 and AUX2 are turned on. Indoor fan runs at set speed.

FAN MODE

a) Indoor fan runs at the set speed while heater, MTV1, MTV2, AUX1 and AUX2 are turned off.
b) Indoor fan speed can be adjusted to low, medium and high.

HEAT MODE

Heat mode without electrical heater

a) MTV2, AUX2 and electric heater are always off.
b) If Tr ≤ Ts - 1 ºC (or - 4ºC if economy contact is activated), then heat operation is activated and MTV1 and AUX1 are turned on. Indoor fan runs at the set speed.
c) If Tr > Ts, then heat operation is terminated and MTV1 and AUX1 are turned off. Indoor fan repeatedly runs at low fan speed for 30 seconds and then stops for 3 minutes.
d) The range of Ts is 16 - 30ºC.
e) Indoor fan speed can be adjusted to low, medium, high and auto.
f) When turned on, MTV1 requires 30 seconds before it is fully open.
g) When turned off, MTV1 requires 120 seconds before it is fully closed.

Heat mode with electrical heater as booster

a) MTV2 and AUX2 are always off.
b) If Tr ≤ Ts - 1ºC (or - 4ºC if economy contact is activated), then heat operation is activated and MTV1 and AUX1 are turned on. Indoor fan runs at the set speed.
c) If Tr > Ts, then heat operation is terminated and MTV1 and AUX1 are turned off. Indoor fan repeatedly runs at low fan speed for 30 seconds and then stops for 3 minutes.
d) If Ti1 < 40ºC, then the electrical heater is turned on. If 40ºC ≤ Ti1 < 45ºC, then the electrical heater maintains its original state. If Ti1 ≥ 45ºC, then the electrical heater is turned off.
e) The range of Ts is 16 - 30ºC
f) Indoor fan speed can be adjusted to low, medium, high and auto.
g) When turned on, MTV1 requires 30 seconds before it is fully open.
h) When turned off, MTV1 requires 120 seconds before it is fully closed.

Heat mode with electrical heater as primary heat source

a) MTV1, MTV2, and AUX2 are always off
b) If Ti2 ≤ 30ºC (or Ti2 is damaged or disconnected), AND if Tr ≤ Ts-1ºC (or -4ºC if economy contact is activated), heat operation is activated, electrical heater and AUX1 are turned on. Indoor fan runs at set speed.
c) If Tr > Ts, then heat operation is terminated and the electrical heater and AUX1 are turned off. Indoor fan repeatedly runs at low fan speed for 30 seconds and then stops for 3 minutes.
d) The range of Ts is 16-30 ºC
e) Indoor fan speed can be adjusted to low, medium, high and auto.

PRE-HEAT

Pre-heat without electrical heater

a) If Ti1 < 36ºC [or < 28ºC is selected by DIPB-S2 position SW4], then MTV1 and AUX1 are turned on, indoor fan remains off.
b) If Ti1 ≥ 38ºC [or ≥ 30ºC is selected by DIPB-S2 position SW4], then MTV1 and AUX1 are turned on, indoor fan runs at set speed.
c) If the indoor coil temperature sensor is damaged, then the pre-heat time is set for 2 minutes. Indoor fan runs at set speed.

Pre-heat with electrical heater

a) Indoor fan will turn on after the electrical heater has been turned on for 10 seconds.

POST-HEAT

Post-heat without electrical heater

a) If Ti1 ≥ 38ºC, then MTV1 and AUX 1 are off, then indoor fan continues to run at set speed.
b) If 36ºC ≤ Ti1 ≤ 38ºC, then MTV1 and AUX1 are turned off. Then indoor fan maintains its original state.
c) If Ti1 < 36ºC, then MTV1 and AUX1 are turned off. Then indoor fan repeatedly runs for 30 seconds and then stops for 3 minutes.
d) If the indoor coil temperature sensor is damaged, then the post-heat time is set for 3 minutes. Indoor fan runs at set speed.

Post-heat with electrical heater

a) Indoor fan will shut down after the unit has been turned off for 20 seconds.

OVER-HEAT PROTECTION OF INDOOR COIL

a) If Ti1 ≥ 75ºC, then MTV1 and AUX1 are turned off. Indoor fan remains on and runs at high speed.
b) If Ti1 < 70ºC, then MTV1 and AUX1 are turned on. Indoor fan remains on and runs at set speed.
c) If the indoor coil temperature sensor is damaged, then the protection mode will be overridden and the unit will work according to the pre-heat and post-heat program.

DEHUMIDIFICATION MODE

a) MTV2, AUX1 and heater are always off.
b) If Tr ≥ 25ºC, then MTV1 and AUX2 will be ON for 3 minutes, and then OFF for 4 minutes.
c) If 16ºC ≤ Tr < 25ºC, then MTV1 and AUX2 will be ON for 3 minutes, and then OFF for 6 minutes.
d) If Tr < 16ºC, then MTV1 and AUX2 will be turned off for 4 minutes.
e) At the end of the above dehumidification cycle, the system will decide the next dehumidification control option. Indoor fan will run at low speed throughout the dehumidification process.

AUTOMODE

Auto cool/heat/heat with electric heater as booster

Every time the unit is turned on, MTV1 is on, AUX1, AUX2 and fan are off. MTV2 and heater are always off.
After 120secs, the subsequent operation mode is decided according to the following programs:

a) If the coil temperature sensor (Ti1) ≥ 36ºC, then MTV1, AUX1 and fan turn on or off according to HEAT mode.
b) If Ti1 < 36ºC, then MTV1, then AUX2 and fan turn on or off according to COOL mode.

Unit remains in AUTO COOL or AUTO HEAT mode throughout the operating cycle until the user changes the mode manually or restarts the unit.
Should the Ti1 sensor be damaged, auto mode will not function.

Auto heat with electric heater as primary heat source / all configuration auto changeover

If current running mode is auto cool mode, then the control logic will change over to auto heat mode when all the following conditions are met:

a) Ts-Tr ≥ 1.0°C (or 4 ºC if economy contact is activated)
b) MTV1 has stop ≥ 10 min.

If current running mode is auto heat mode, then the control logic will change over to auto cool mode when all the following conditions are met:

a) Tr-Ts ≥ 1.0°C (or 4 ºC if economy contact is activated)
b) MTV1 has stop ≥ 10 min.

Note: Auto cool or auto heat operation are the same as cool or heat mode respectively.

D.4.2. Without Valve Configuration

COOL MODE

a) Electric heater, AUX1, MTV1 and MTV2 are always off.
b) If Tr ≥ Ts + 1ºC (or + 4ºC if economy contact is activated), then cool operation is activated and AUX2 is turned on. Indoor fan runs at set speed.
c) If Tr < Ts, then cool operation is terminated and AUX2 is turned off. Indoor fan is turned off.
d) The range of Ts is 16 - 30ºC
e) Indoor fan speed can be adjusted to low, medium, high and auto.

Note: When the unit is turned off, the indoor fan shut down after 5 seconds.

LOW TEMPERATURE PROTECTION OF INDOOR COIL

a) If Ti1 ≤ 2ºC for 2 minutes, then AUX2 is turned off. If low speed is selected via user interface, then indoor fan runs at medium speed. If medium or high speed is selected via user interface, then indoor fan runs at set speed.
b) If Ti1 ≥ 5ºC for 2 minutes, then AUX2 is turned on. Indoor fan runs at set speed.

FAN MODE

a) Indoor fan runs at the set speed while heater, MTV1, MTV2, AUX1 and AUX2 are turned off.
b) Indoor fan speed can be adjusted to low, medium and high.

HEAT MODE

Heat mode without electrical heater

a) MTV1, MTV2, AUX2 are always off.
b) If Tr ≤ Ts - 1ºC (or - 4ºC if economy contact is activated), then heat operation is activated and AUX1 is turned on. Indoor fan runs at the set speed.
c) If Tr > Ts, then heat operation is terminated and AUX1 is turned off. Indoor fan repeatedly runs at low fan speed for 30 seconds and then stops for 3 minutes.
d) The range of Ts is 16 - 30ºC.
e) Indoor fan speed can be adjusted to low, medium, high and auto.

Heat mode with electrical heater as booster

Not available.

Heat mode with electrical heater as primary heat source

Not available.

PRE-HEAT

Pre-heat without electrical heater

a) MTV1, MTV2 and AUX2 are off.
b) If Ti1 < 36 ºC [or 28 ºC depending on DIP setting], AUX1 is on while indoor fan remains off.
c) If Ti1 ≥ 38 ºC [or 30 ºC depending on DIP setting], AUX1 is on while indoor fan runs at set speed.
d) If indoor coil temperature sensor is damaged, pre-heat time is set for 2 minutes and indoor fan runs at set speed.

Pre-heat with electrical heater

Not available.

POST HEAT

Without Electrical Heater

Not available.

With Electrical Heater

Not available.

OVERHEAT PROTECTION OF INDOOR COIL

a) If Ti1 ≥ 75ºC, then AUX1 is turned off, indoor fan remains on and runs at high speed.
b) If Ti1 < 70ºC, then AUX1 is turned on, indoor fan remains on and runs at set speed.
c) If the indoor coil temperature sensor is damaged, then the protection mode will be overridden and the unit will work according to the pre-heat and post-heat program.

DEHUMIDIFICATION MODE

a) MTV1, MTV2, AUX1 and heater are always off.
b) If Tr ≥ 25ºC, then indoor fan and AUX2 will be ON for 3 minutes, and then OFF for 4 minutes.
c) If 16ºC ≤ Tr < 25ºC, then indoor fan and AUX2 will be ON for 3 minutes, and then OFF for 6 minutes.
d) If Tr < 16ºC, then indoor fan and AUX2 will be turned off.
e) At the end of the above dehumidification cycle, the system will decide the next dehumidification control option. Indoor fan will run at low speed throughout the dehumidification process.

AUTOMODE

Not available.

D.5. Control Logic For 4-Pipe System

Note: 4-pipe system must always be equipped with 2 valves.

COOL MODE

a) MTV2, AUX1 and Electrical Heater are always off.
b) If Tr ≥ Ts + 1ºC (or + 4ºC if economy contact is activated), then cool operation is activated, MTV1 and AUX2 are turned on. Indoor fan runs at set speed.
c) If Tr < Ts, then cool operation is terminated, MTV1 and AUX2 are turned off. Indoor fan runs at set speed.
d) The range of Ts is 16 - 30ºC
e) Indoor fan speed can be adjusted to low, medium, high and auto.
f) When turned on, MTV1 requires 30 seconds before it is fully open.
g) When turned off, MTV1 requires 120 seconds before it is fully closed.
h) When the unit is turned off, the indoor fan will shut down after 5 seconds.

LOW TEMPERATURE PROTECTION OF INDOOR COIL

a) If Ti1 ≤ 2ºC for 2 minutes, then MTV1 and AUX2 are turned off. If indoor fan is set for low speed, then it will run at medium speed. If it is set at medium or high speed, then it will keep running at the same speed.
b) If Ti1 ≥ 5ºC for 2 minutes, then MTV1 and AUX2 are turned on. Indoor fan runs at set speed.

FAN MODE

a) Indoor fan runs at the set speed while heater, MTV1, MTV2, AUX1 and AUX2 are turned off.
b) Indoor fan speed can be adjusted to low, medium and high.

HEAT MODE

Without Electrical Heater

a) MTV1, AUX2 and are heater always off.
b) If Tr ≤ Ts - 1ºC (or - 4ºC if economy contact is activated), then heat operation is activated, MTV2 and AUX1 are turned on. Indoor fan runs at the set speed.
c) If Tr > Ts, then heat operation is terminated, MTV2 and AUX1 are turned off. Indoor fan repeatedly runs at low fan speed for 30 seconds and then stops for 3 minutes.
d) The range of Ts is 16 - 30ºC.
e) Indoor fan speed can be adjusted to low, medium, high and auto.
f) When turned on, MTV2 requires 30 seconds before it is fully open.
g) When turned off, MTV2 requires 120 seconds before it is fully closed.

With Electrical Heater as Booster

a) MTV1 and AUX2 are always off.
b) If Tr ≤ Ts - 1ºC (or - 4ºC if economy contact is activated), then heat operation is activated, MTV2 and AUX1 are turned on. Indoor fan runs at the set speed.
c) If Tr > Ts, then heat operation is terminated, MTV2 and AUX1 are turned off. Indoor fan repeatedly runs at low fan speed for 30 seconds and then stops for 3 minutes.
d) If Ti2 < 40ºC, then the electrical heater is turned on. If 40ºC ≤ Ti2 < 45ºC, then the electrical heater maintains its original state. If Ti2 ≥ 45ºC, then the electrical heater is turned off.
e) The range of Ts is 16 - 30ºC
f) Indoor fan speed can be adjusted to low, medium, high and auto.
g) When turned on, MTV2 requires 30 seconds before it is fully open.
h) When turned off, MTV2 requires 120 seconds before it is full closed.

PRE-HEAT

Without Electrical Heater

a) If Ti2 < 36ºC [or 28ºC depends on DIP setting], then MTV2 and AUX1 are on, then indoor fan remains off.
b) If Ti2 ≥ 38ºC [or 30ºC depends on DIP setting], then MTV2 and AUX1 are on, then indoor fan runs at set speed.
c) If indoor coil temperature sensor is damaged, then pre-heat time is set for 2 minutes and indoor fan runs at set speed.

With Electrical Heater

a) MTV2 and AUX1 turn on.
b) Indoor fan will turn on after the electrical heater is turned on for 10 seconds.

POST HEAT

Without Electrical Heater

a) If Ti2 ≥ 38ºC, then MTV2 and AUX 1 are turned off. Indoor fan continues to run at set speed.
b) If 36ºC ≤ Ti2 ≤ 38ºC, then MTV2and AUX1 are turned off. Indoor fan maintains its original state.
c) If Ti2 < 36ºC, then MTV2 and AUX1 are turned off. Indoor fan repeatedly runs for 30 seconds and then stops for 3 minutes.
d) If the indoor coil temperature coil is damaged, then post-heat time is set for 3 minutes .Indoor fan runs at set speed.

With Electrical Heater

a) Indoor fan will shut down after the unit has been turned off for 20 seconds.

OVER HEAT PROTECTION OF INDOOR COIL

a) If Ti2 ≥ 75ºC, then MTV2 and AUX1 are turned off, indoor fan remains on and runs at high speed.
b) If Ti2 < 70ºC, then MTV2 and AUX1 are turned on, indoor fan remains on and runs at set speed.
c) If the indoor coil temperature sensor is damaged, then the protection mode will be overridden and the unit will work according to the pre-heat and post heat set times.

DEHUMIDIFICATION MODE

a) MTV2, AUX1 and heater are always off.
b) If Tr ≥ 25ºC, then MTV1 and AUX2 will be ON for 3 minutes, and then OFF for 4 minutes.
c) If 16ºC ≤ Tr < 25ºC, then MTV1 and AUX2 will be ON for 3 minutes, and then OFF for 6 minutes.
d) If Tr < 16ºC, then MTV1 and AUX2 will be turned off for 4 minutes.
e) At the end of the above dehumidification cycle, the system will decide the next dehumidification control option. Indoor fan will run at low speed throughout the dehumidification process.

AUTOMODE

a) If the current running mode is AUTO COOL mode, it will change over to AUTO HEAT mode when all the following conditions are met:
    i. Ts – Tr ≥ 1ºC (or - 4ºC if economy contact is activated)
    ii. MTV1 has closed ≥ 10 min.
b) If the current running mode is AUTO HEAT mode, it will change over to AUTO COOL mode when all the following conditions are met:
    i. Tr – Ts ≥ 1ºC (or + 4ºC if economy contact is activated)
    ii. MTV2 has closed ≥ 10 min.

Note: AUTO COOL or AUTO HEAT operations are the same as COOL or HEAT mode respectively.

D.6. Sleep Mode

a) The sleep mode can only be set when the unit is in cool mode or heat mode.
b) If the sleep mode is activated when the unit is in cool mode, then the indoor fan will run at low speed and Ts will increase by 2ºC over 2 hours.
c) If the sleep mode is activated when the unit is in heat mode, then the indoor fan will run at set speed and Ts will decrease by 2ºC over 2 hours.
d) Changing the mode of operation will cancel the sleep mode.

The cool mode sleep profile is:

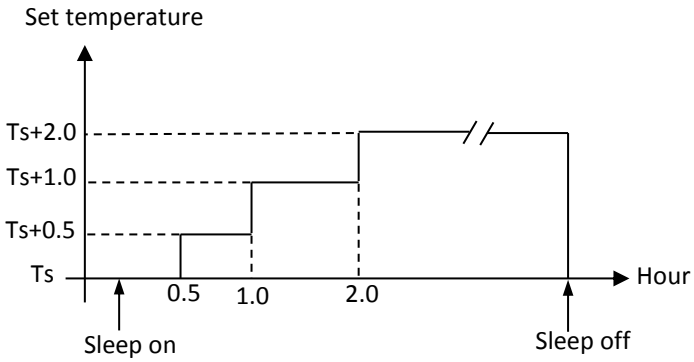

The heat mode sleep profile is:

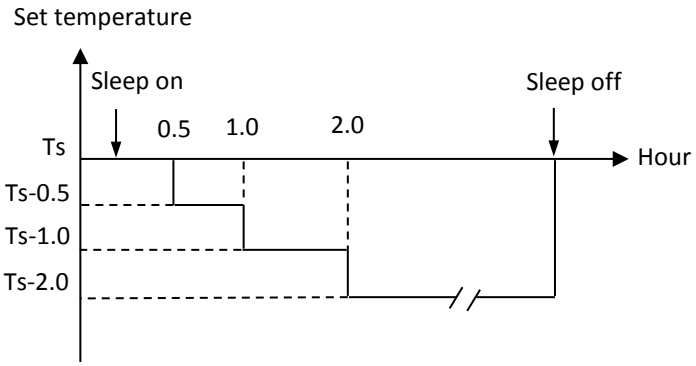

D.7. Auto Fan Speed

COOL MODE
Fan speed cannot change until it has run for more than 30 seconds.
Fan speed is regulated according to the profile below.

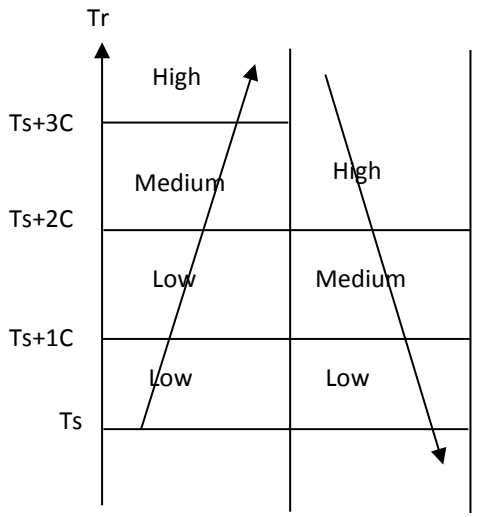

HEAT MODE
Fan speed cannot change until it has run for more than 30 seconds.
Fan speed is regulated according to the profile below.

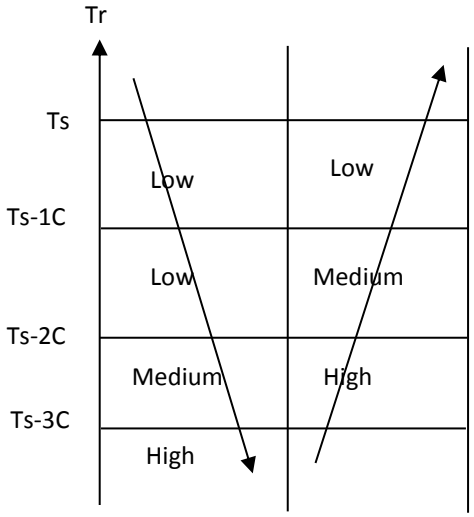

D.8. Louver

For remote handset

Whenever the indoor fan is running, the louver can swing or stop at the desired position.
Louver angle: 0~100 º, opens clockwise with widest angle at 100 º.
Swing angle: 35~100 º, opens clockwise to 68º. Below are the 4 fixed positions which can be set from wireless LCD handset.

Position	Angle against vertical
1	35 º
2	57 º
3	83 º
4	100 º

For wired wall pad

Louver angle: 0~100 º, opens clockwise, with widest angle at 100 º.
Swing angle: 35~100 º, opens clockwise to 68º. User may stop louver at any desired position between 35~100 º.

D.9. Buzzer

If a command is received by the fan coil unit, the master unit will respond with 2 beeps for each setting, while the slave unit will respond with 1 beep.

D.10. Auto Restart

The system uses non-volatile memory to save the present operation parameters when system is turned off or in case of system failure or cessation of power supply. Operation parameters are mode, set temperature, louver's position, and the fan speed. When power supply resumes or the system is switched on again, the same operations as previously set will function.

D.11. On/Off Switch On LED Panel

a) This is a tact switch to select Cool→Heat→Off operation mode.
b) In COOL mode, the set temperature of the system is 24ºC with auto fan speed and louver. There are no timer and sleep modes.
c) In HEAT mode, the set temperature of the system is 24ºC with auto fan speed and louver. There are no timer and sleep modes.
d) Master unit that does not use a wall pad will globally broadcast.

NOTE

When button pressing is effective, the master unit buzzer will beep twice and the slave unit will beep once.

D.12. Drain Pump

Drain pump turns ON if the thermostat activates during cooling or dehumidification cycles. It remains on for at least 5 minutes after the thermostat stops. During mode change from cooling to non-cooling mode, the water pump will turn on for a minimum of 5 minutes.

> **CAUTION**
>
> *If the system is turned off at the circuit breaker (or main power supply), the drain pump will not work.*

D.13. Float Switch

Float-switch opens before unit is turned on.

- If the float switch (N/C) is opened before the unit is turned on, then MTV1 is off. The drain pump and indoor fan will operate.
- After float switch is closed, MTV1 is on.

Float switch is opened, when unit is on.

- If the float switch is opened continuously ≥ 5 seconds, the drain pump will work and MTV1 will remain off.
- After the float switch is closed, the drain pump will run for an additional 5 minutes.
- If the float switch is opened for 10 minutes continuously, then MTV1 will remain off, the indoor fan will run at set speed and the system reports an error.

Float switch is opened, when unit is off.

- If the float switch is opened, the drain pump will work.
- After the float switch is closed, the drain pump will run for an additional 5 minutes. If the float switch is opened for 10 minutes continuously, the system reports an error.

D.14. Electric Heater Safety Switch

- Before the electrical heater is turned on, the EH safety switch must be closed and the fan must be working.
- When electrical heater is ON, electrical heater safety switch is opened for >= 1 second or the fan is not working, EH will be turned off immediately and report an error and fan speed is changed to high speed.
- Once the contact is returned to the closed >= 180 seconds, reset the error and the heater will start again.
- When the EH safety switch is opened ≥ 3 times within 60 minutes the heater is not allowed to start anymore.
- Turn off the unit to reset the fault, provided that the switch has returned to the closed position.

D.15. Low Temperature Protection of Indoor Coil in Winter

This is frost protection for when the unit is off to prevent water in the coil and room from freezing.

If Unit with SW2=0 (2-pipe system), is in Standby Mode

If Tr <= 2 ºC for 2 minutes

1. MTV1 is turned ON.
2. AUX1 is closed.
3. If Ti1 < 5ºC for 2 minutes EH (if present) is switched ON.
4. Indoor fan is turned on at low speed.

If Tr ≧ 5ºC for 2 minutes

1. MTV1 is turned OFF.
2. AUX1 is open.
3. Electric Heater is turned OFF.
4. Indoor fan Switched OFF.

If Unit with SW2=1(4-pipe system), is in Standby Mode

If Tr ≦ 2 ºC for 2 minutes

1. MTV2 is turned ON.
2. AUX1 is closed.
3. If Ti2 < 5ºC for 2 minutes EH (if present) is switched ON.
4. Indoor fan is turned on at low speed.

If Tr ≧ 5ºC for 2 minutes

1. MTV2 is OFF.
2. AUX1 is open.
3. Electric Heater is turned OFF.
4. Indoor fan Switched OFF.

D.16. LED Display and Error Description

Complete Function PCB - S Control Type		
Fan speed setting	LED Display	Condition
High speed	Red LED On	Normal
Medium speed	Yellow LED On	Normal
Low speed	Green LED On	Normal

For all units - Green LED			
Error Description	Blink	Reason	Remedy
Electrical heater failure	Green LED blinks 1 times, stops for 3s	*Only for unit with EH.* EH safety switch is opened.	1. Change fan speed to high. 2. Replace the damaged EH safety switch.
Indoor coil sensor 2 failure	Green LED blinks 2 times, stops for 3s	Ti2 sensor unplugged or damaged.	1. Check if Ti2 plug is connected or not. 2. Check if sensor's resistance is correct or not.
Return air sensor failure	Green LED blinks 3 times, stops for 3s	Room sensor unplugged or damaged.	1. Check if Tr plug is connected or not. 2. Check if sensor's resistance is correct or not.
Indoor coil sensor 1 failure	Green LED blinks 4 times, stops for 3s	Ti1 sensor unplugged or damaged.	1. Check if Ti1 plug is connected or not. 2. Check if sensor's resistance is correct or not.
Indoor coil low temperature protection	Green LED blinks 5 times, stops for 3s	Water temperature is lower than 3 ºC.	Check the water temperature.
Indoor coil over heat protection	Green LED blinks 6 times, stops for 3s	Water temperature is higher than 70 ºC.	Check the water temperature
Water pump failure	Green LED blinks 7 times, stops for 3s	Float switch is opened.	1. Check if the condensate water pipe is connected or not. 2. Check if the pump is functioning or not.
Anti-frozen protection	Green LED blinks 11 times, stops for 3s	When unit is standby, Tr<2ºC.	1. Turn on unit to keep Tr higher than 5ºC.

D.17. LED Display on Master/Slave Connection

The error message indicating the defect status of all slave units will be shown in LED lights on the master unit.

Master unit LED		
Unit No.	**Blink**	**Remedy**
Unit 2 failure	RED LED blinks 2 times, stops for 3s	Check unit 2 communication plug and fix it
Unit 3 failure	RED LED blinks 3 times, stops for 3s	Check unit 3 communication plug and fix it
Unit 4 failure	RED LED blinks 4 times, stops for 3s	Check unit 4 communication plug and fix it
Unit 5 failure	RED LED blinks 5 times, stops for 3s	Check unit 5 communication plug and fix it
Unit 6 failure	RED LED blinks 6 times, stops for 3s	Check unit 6 communication plug and fix it
Unit 7 failure	RED LED blinks 7 times, stops for 3s	Check unit 7 communication plug and fix it
Unit 8 failure	RED LED blinks 8 times, stops for 3s	Check unit 8 communication plug and fix it
Unit 9 failure	RED LED blinks 9 times, stops for 3s	Check unit 9 communication plug and fix it
Unit 10 failure	RED LED blinks 10 times, stops for 3s	Check unit 10 communication plug and fix it
Unit 11 failure	RED LED blinks 11 times, stops for 3s	Check unit 11 communication plug and fix it
Unit 12 failure	RED LED blinks 12 times, stops for 3s	Check unit 12 communication plug and fix it
Unit 13 failure	RED LED blinks 13 times, stops for 3s	Check unit 13 communication plug and fix it
Unit 14 failure	RED LED blinks 14 times, stops for 3s	Check unit 14 communication plug and fix it
Unit 15 failure	RED LED blinks 15 times, stops for 3s	Check unit 15 communication plug and fix it
Unit 16 failure	RED LED blinks 16 times, stops for 3s	Check unit 16 communication plug and fix it
Unit 17 failure	RED LED blinks 17 times, stops for 3s	Check unit 17 communication plug and fix it
Unit 18 failure	RED LED blinks 18 times, stops for 3s	Check unit 18 communication plug and fix it
Unit 19 failure	RED LED blinks 19 times, stops for 3s	Check unit 19 communication plug and fix it
Unit 20 failure	RED LED blinks 20 times, stops for 3s	Check unit 20 communication plug and fix it
Unit 21 failure	RED LED blinks 21 times, stops for 3s	Check unit 21 communication plug and fix it
Unit 22 failure	RED LED blinks 22 times, stops for 3s	Check unit 22 communication plug and fix it
Unit 23 failure	RED LED blinks 23 times, stops for 3s	Check unit 23 communication plug and fix it
Unit 24 failure	RED LED blinks 24 times, stops for 3s	Check unit 24 communication plug and fix it
Unit 25 failure	RED LED blinks 25 times, stops for 3s	Check unit 25 communication plug and fix it
Unit 26 failure	RED LED blinks 26 times, stops for 3s	Check unit 26 communication plug and fix it
Unit 27 failure	RED LED blinks 27 times, stops for 3s	Check unit 27 communication plug and fix it
Unit 28 failure	RED LED blinks 28 times, stops for 3s	Check unit 28 communication plug and fix it
Unit 29 failure	RED LED blinks 29 times, stops for 3s	Check unit 29 communication plug and fix it
Unit 30 failure	RED LED blinks 30 times, stops for 3s	Check unit 30 communication plug and fix it
Unit 31 failure	RED LED blinks 31 times, stops for 3s	Check unit 31 communication plug and fix it
Unit 32 failure	RED LED blinks 32 times, stops for 3s	Check unit 32 communication plug and fix it

E. Networking System

E.1. Master-Slave Network

The control PCB can be set either as a master unit or slave unit.

Master Unit Function

a) The master unit sends data regarding its setting to the slave unit.
b) The master unit settings are unit ON/OFF, Mode, Fan Speed, Timer, Clock, Set Temperature, Louver Function, and Sleep Function for handset operation.
c) The master unit settings are unit ON/OFF, Mode, Fan Speed, Timer, Clock, Set Temperature, Louver Function, and Sleep Function for wall pad operation.

Slave Unit Function

a) The slave unit receives data regarding its settings from the master unit.
b) The slave unit is allowed to change to a locally desired setting by local controller as long as there are no subsequent changes to the settings of the master unit.
c) The slave units can be set individually for timer ON/OFF function by handset or wall pad. The handset cannot override the wall pad timer and clock setting.

E.1.1. Master Control Unit Settings

The control PCB can receive data from both wireless Infrared handset and wired wall pad.

Using Remote Control Handset to Set Master Control Unit

1. Connect all the unit's PCBs according to the wire color and type of connector.
2. Select the master unit by setting DIPA-S1 SW6 to ON (=1) in the PCB.
3. Ensure the DIPA-S1 SW6 is set to OFF (=0) in the PCB on each slave unit.
4. Switch on the units by connecting the main power supply.
5. Using the handset, set the operation parameters for the master unit which will automatically send the settings to the slave unit.
6. Master unit will beep twice confirming receipt of commands while the slave unit will beep once.

Using Wall pad to Set Master Control Unit

1. Connect all the unit's PCBs according to the wire color and type of connector.
2. Select the master unit by setting DIPA-S1 SW6 to ON (=1) in the PCB.
3. Ensure the DIPA-S1 SW6 is set to OFF (=0) in the PCB on each slave unit.
4. Provide each slave unit with an addressable code by configuring SW1 – SW5 of DIPA-S1 according to the DIP switch setting table.
5. Switch on the units by connecting the main power supply.
6. Using the wall pad set the operation parameters for the master unit which will send the setting to the slave units by Global-control communication or Addressable communication methods.
7. Master unit will beep twice confirming receipt of commands while the slave unit will beep once.

E.1.2. Master-Slave Network Setup

1. Disconnect the communication plug from the control box

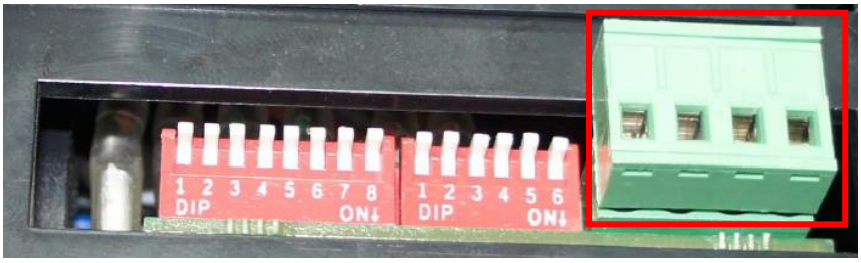

2. Communication plug

A, B, A, B is printed on the main PCB. When you connect the wires, please ensure connection of A to A and B to B.

3. Connection wire

   i. If the total length of wire is more than 1000m, please use shielded wire in order to protect the signal transmission.
   ii. Complete wire connection

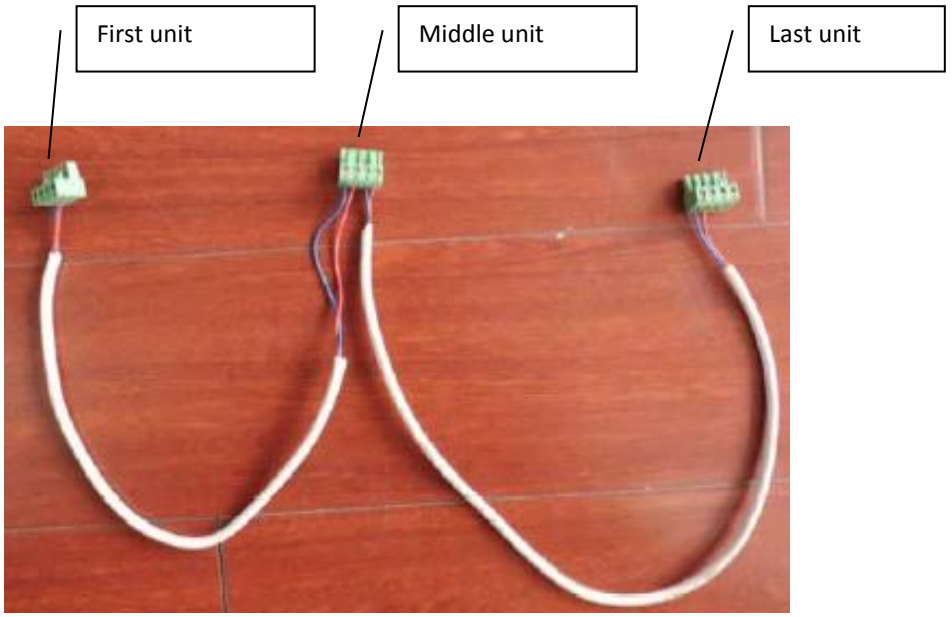

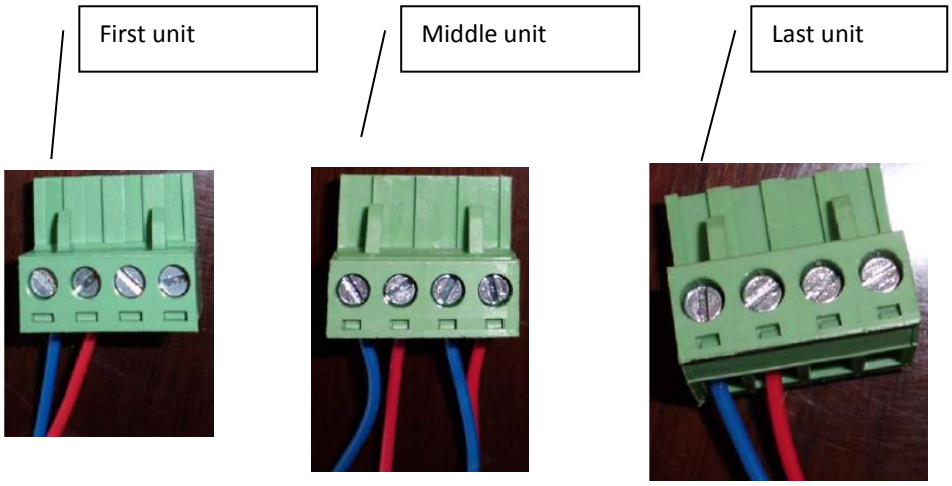

iii. Wire connection check

1) After the wire connection is completed, please check that the wire colours correspond.
2) Check the wire contact by using a multimeter.

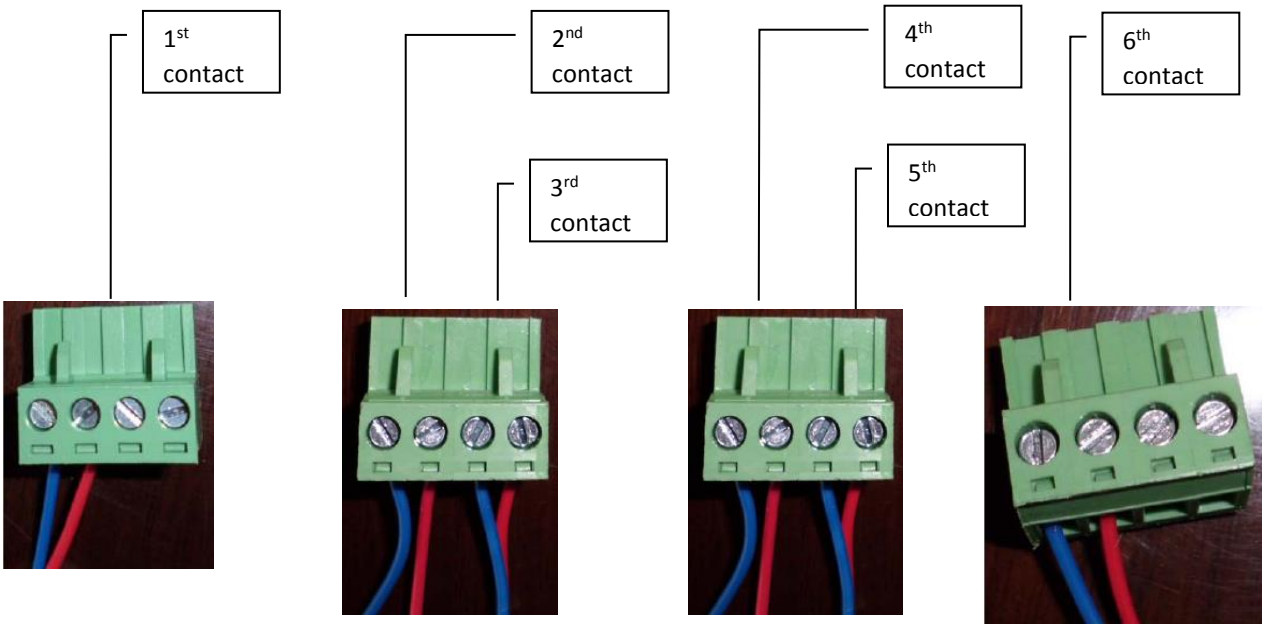

3) Check 1 and 2, 3 and 4, 5 and 6 to be sure the connections are correct.
4) If the resistance between two wire contacts is too high, please check and reconnect the wire contacts.

4. Reconnect the communication plug to the control box

E.1.3. Master-Slave Communication Method

There are two modes for the master-slave structure.

Global Control communication

The master unit will broadcast the settings to all slave units. During normal operation, slave units can receive commands from its wireless handset and wall pad control panel. Upon receiving the master global commands, all slave unit settings will be replaced by the master settings.

DIPA-S1 address setting: ON=1, OFF=0.

DIPA-S1 SW6	DIPA-S1 SW5	DIPA-S1 SW4	DIPA-S1 SW3	DIPA-S1 SW2	DIPA-S1 SW1	Unit No.	Remark
1	0	0	0	0	0	01	Master
0	0	0	0	0	1	02	Slave
0	0	0	0	1	0	03	Slave
0	0	0	0	1	1	04	Slave
0	0	0	1	0	0	05	Slave
0	0	0	1	0	1	06	Slave
0	0	0	1	1	0	07	Slave
0	0	0	1	1	1	08	Slave
0	0	1	0	0	0	09	Slave
0	0	1	0	0	1	10	Slave
0	0	1	0	1	0	11	Slave
0	0	1	0	1	1	12	Slave
0	0	1	1	0	0	13	Slave
0	0	1	1	0	1	14	Slave
0	0	1	1	1	0	15	Slave
0	0	1	1	1	1	16	Slave
0	1	0	0	0	0	17	Slave
0	1	0	0	0	1	18	Slave
0	1	0	0	1	0	19	Slave
0	1	0	0	1	1	20	Slave
0	1	0	1	0	0	21	Slave
0	1	0	1	0	1	22	Slave
0	1	0	1	1	0	23	Slave
0	1	0	1	1	1	24	Slave
0	1	1	0	0	0	25	Slave
0	1	1	0	0	1	26	Slave
0	1	1	0	1	0	27	Slave
0	1	1	0	1	1	28	Slave
0	1	1	1	0	0	29	Slave
0	1	1	1	0	1	30	Slave
0	1	1	1	1	0	31	Slave
0	1	1	1	1	1	32	Slave

If the master unit is equipped with a wireless handset or a wall pad, it can only use the Global-Control communication method.

E.2. Open Modbus protocol

Transfer Mode: RTU, BAUD Rate: 9600bps, 8 data bit, 1 stop bit, None parity bit

The communications require a delay of 80ms between reading an answer and sending the next command. All temperatures are equal to reading data*10 accuracy: 0.1 degree C.

Supported Functions:

Function Code	Function Description
01(01H)	Read Coils
02(02H)	Read Discrete Inputs
03(03H)	Read Holding Registers
04(04H)	Read Input Registers
05(05H)	Write Single Coil
06(06H)	Write Single Register
15(0FH)	Write Multiple Coils
16(10H)	Write Multiple Registers
255(FFH)	Extended Commands which are used to test unit

Valid Error code table:

Error code	Description	Definition
01 (01H)	Invalid commands	Received commands beyond valid commands
02 (02H)	Invalid data address	Data addresses beyond valid data address
03 (03H)	Invalid data	Data beyond definition range
04 (04H)	Write data not successful	Write data did not succeed

Coils table:

Description	Address	Type*	Remark
Unit ON/OFF	100000	R/W	
Sleep mode	100001	R/W	
Louver swing	100002	R/W	
Reserved	100003 to 100015		

Discrete table:

Description	Address	Type*	Remark
MTV1	200000	R	
MTV2	200001	R	
AUX1	200002	R	
AUX2	200003	R	
Condensate pump	200004	R	
Electrical heater	200005	R	
Wired wall pad	200006	R	
PRO	200007	R	
Float switch	200008	R	
Reserved	200009	R	
EH safety switch	200010	R	
Unit ON/OFF status	200011	R	Testing purpose only.

** R = read only, W = write only, R/W = read and write.*

Holding Register table:

Description	Address	Type*	Remark
Mode setting	300000	R/W	Cooling mode = 01(H) Humidify mode = 02(H) Fan mode = 04(H) Heating mode = 08(H) Auto mode = 10(H)
Fan speed setting	300001	R/W	Low speed = 04(H) Medium speed = 02(H) High speed = 01(H) Auto fan speed = 07(H)
Louver swing setting	300002	R/W	Position 1 = 01(H) Position 2 = 02(H) Position 3 = 03(H) Position 4 = 04(H) Auto = 0F(H) Stop = 00(H)
Setting temperature	300003	R/W	16~30 degree C (actual*10 format)
Address setting	300004	R	Set by dip-switch, reading only
Reset	300005	W	=0x33 reset error
Week	300006	W	Calibration wired wall pad and set timer function
Hour	300007	W	Calibration wired wall pad and set timer function
Minute	300008	W	Calibration wired wall pad and set timer function
Second	300009	W	Calibration wired wall pad and set timer function
Hours in Timer on	300010	R/W	Timer ON
Minute in Timer on	300011	R/W	Timer ON
Hours in Timer off	300012	R/W	Timer OFF
Minute in Timer off	300013	R/W	Timer OFF
Icon of Timer ON or OFF	300014	R/W	BIT0 = Icon of Timer ON BIT1 = Icon of Timer OFF 1 = enable 0 = disable
Super low speed rpm	310000	R/W	200~1500
Low speed rpm	310001	R/W	200~1500
Medium speed rpm	310002	R/W	200~1500
High speed rpm	310003	R/W	200~1500
RPM setting	310004	R/W	0~2000 (used to test，0 = disable)
Temperature sampling time	310005	R/W	2~100, default:5S
Factor of auto fan speed	310006	R/W	2~150, default:20
Factor of modulating valve	310007	R/W	2~250, default:150

** R = read only, W = write only, R/W = read and write.*

Input Register table:

Description	Address	Type*	Remark
Dip switch 1 status	400000	R	
Dip switch 2 status	400001	R	
Room temperature sensor	400002	R	
Ti1 temperature sensor	400003	R	
Ti2 temperature sensor	400004	R	
Error code	400005	R	Bit0 = Room temperature sensor error Bit1 = Ti1 temperature sensor error Bit2 = Ti2 temperature sensor error Bit3 = Float switch error Bit4 = Indoor coil low temperature protection Bit5 = Indoor coil over heat protection Bit6 = Reserved Bit7 = Electrical heater failure Bit8 = Motor1 Error Bit9 = Motor2 Error Bit10 = System parameters error Bit11 = Anti-frozen protection Bit12 = Reserved Bit13 = Reserved Bit14 = Reserved Bit15 = Reserved
Fan speed status	400006	R	Low = 04(H) Medium = 02(H) High = 01(H)
Mode status	400007	R	Cooling mode = 01(H) Dehumidify mode = 02(H) Fan mode = 04(H) Heating = 08(H)
Setting temperature status	400008	R	Testing only
Room temperature in wall pad status	400009	R	
Room temperature in main PCB status	400010	R	
Unit type	400011	R	4-pipe = 03, 2-pipe = 02 This setting is configured by dip switch
EC motor 1# RPM	400012	R	
EC motor 2# RPM	400013	R	

** R = read only, W = write only, R/W = read and write.*

Remark:
The above protocol address is in Base 0.

F. Control Specifications: Flexible Function PCB - W Control

F.1. Features

- Condensate management with valve protection and NC alarm contact.
- Integrated fan relays for zone control applications.
- Simple error diagnostic and LED error display.

F.2. I/O Port Definitions

I/O		Code	2-Pipe	4-Pipe
Analogue input	Coil temperature sensor	AI	Cooling / heating coil sensor (Ti1)	Cooling only coil sensor (Ti1)
Voltage input	High fan speed	H	230VAC input signals from wired thermostat.	
	Medium fan speed	M		
	Low fan speed	L		
Voltage input	Phase	L	External 230VAC power supply connection to the PCB.	
	Neutral	N		
	Earth	GND		
Digital input	Float switch	Float	Voltage-free (NC).	
Voltage output	Water pump	PUMP	Voltage output (L).	
Voltage output	High fan speed	H	230VAC outputs for 3-speed AC fan motor.	
	Medium fan speed	M		
	Low fan speed	L		
	Neutral	N		
	Stepping motor	CN1-2	Power supply to louver stepping motors Voltage output (L)	
Digital output	LED display	X-DIS	Digital communication port to LED display.	
Voltage-free output	Alarm	ALARM	Voltage-free alarm contact: (a) Standard configuration is (NC). (b) Optional field-wired configuration is (NO).	

F.3. Wiring Diagrams

F.3.1. Standard W Control PCB

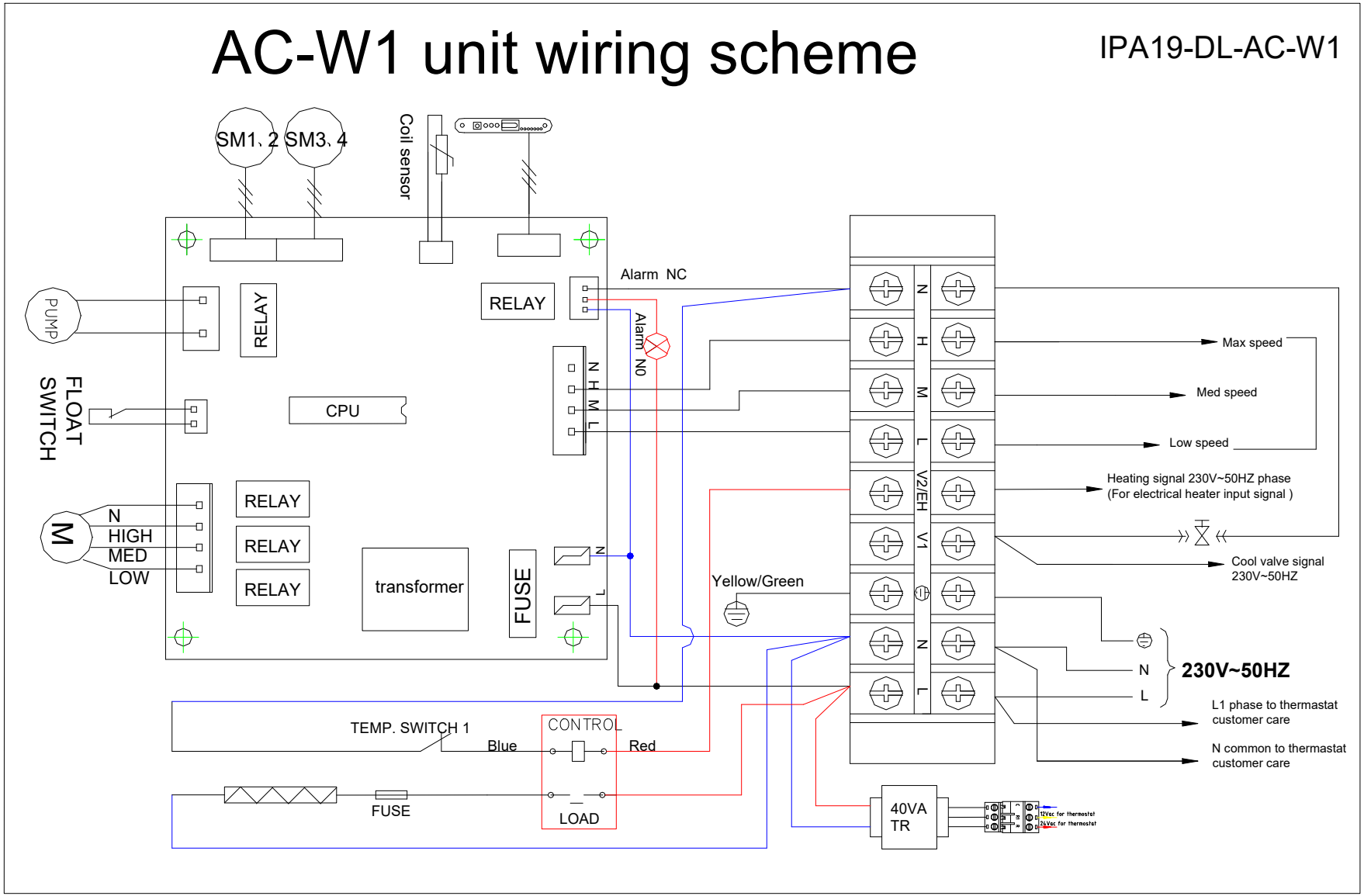

F.4. AC-W PCB Control Logic Specifications

F.4.1. Unit Power ON/OFF

a) The unit is turned ON when any of the fan speed inputs (from thermostat) are ON.
b) The unit is turned OFF only if all of the fan speed inputs (from thermostat) are OFF.

F.4.2. Alarm Protection and Error Display

a) If the float switch is open for 5 minutes, then the (NC) voltage-free alarm contact shall be open and the (NO) voltage free alarm contact shall be closed.
b) If the float switch is open for 10 minutes, the LED display reports a condensate management failure (see table on the next page).

F.4.3. Drain Pump Operation

a) When the unit turns ON:

   I. If Ti1 < 14 ºC, the drain pump turns ON.
   II. If 14 ºC< =Ti<16ºC, the drain pump keeps original state.
   III. If Ti1 ≥ 16ºC, the drain pump turns OFF.

b) When the unit turns OFF and the drain pump is ON for 5 minutes, and then turn OFF.

c) At any time:

   I. If the float switch is OPEN, the drain pump will turn ON.
   II. If the float switch is OPEN and then CLOSES, the drain pump will remain ON for 5 minutes, and then turn OFF.

F.4.4. Louver Control

a) When the unit is OFF, the louvers are closed (angle at 100º against vertical).
b) When the unit turns ON, the louvers open (angle at 87º against the horizontal).
c) When the unit turns OFF, the louvers return to a closed position (100º against the vertical).

F.4.5. Low Temperature Protection of Indoor Coil in Winter

This is frost protection for when the unit is off to prevent water in the coil and room from freezing.

Unit is in Standby Mode

If Ti1≦ 2 °C for 2 minutes, report error code and Buzzer is beeping for 3 minutes.

F.5. LED Display and Error Description

Flexible Function PCB - W Control Type		
Fan speed setting	LED Display	Condition
High speed	Red LED On	Normal
Medium speed	Yellow LED On	Normal
Low speed	Green LED On	Normal

Error Description	LED status			
	Red	Yellow	Green	Remedy
Coil temperature sensor failure	On	Blink	Blink	1. Check if Ti1 sensor plug is connected or not. 2. Check if sensor's resistor is correct or not.
Water pump failure	Blink	Blink	Blink	1. Check if the condensate water pipe is connected or not. 2. Check if the pump is functioning or not.
Anti-frozen protection	On	On	Blink	1. Turn on unit to keep Ti1 higher than 5ºC.

G. User Interface

G.1. Remote Handset

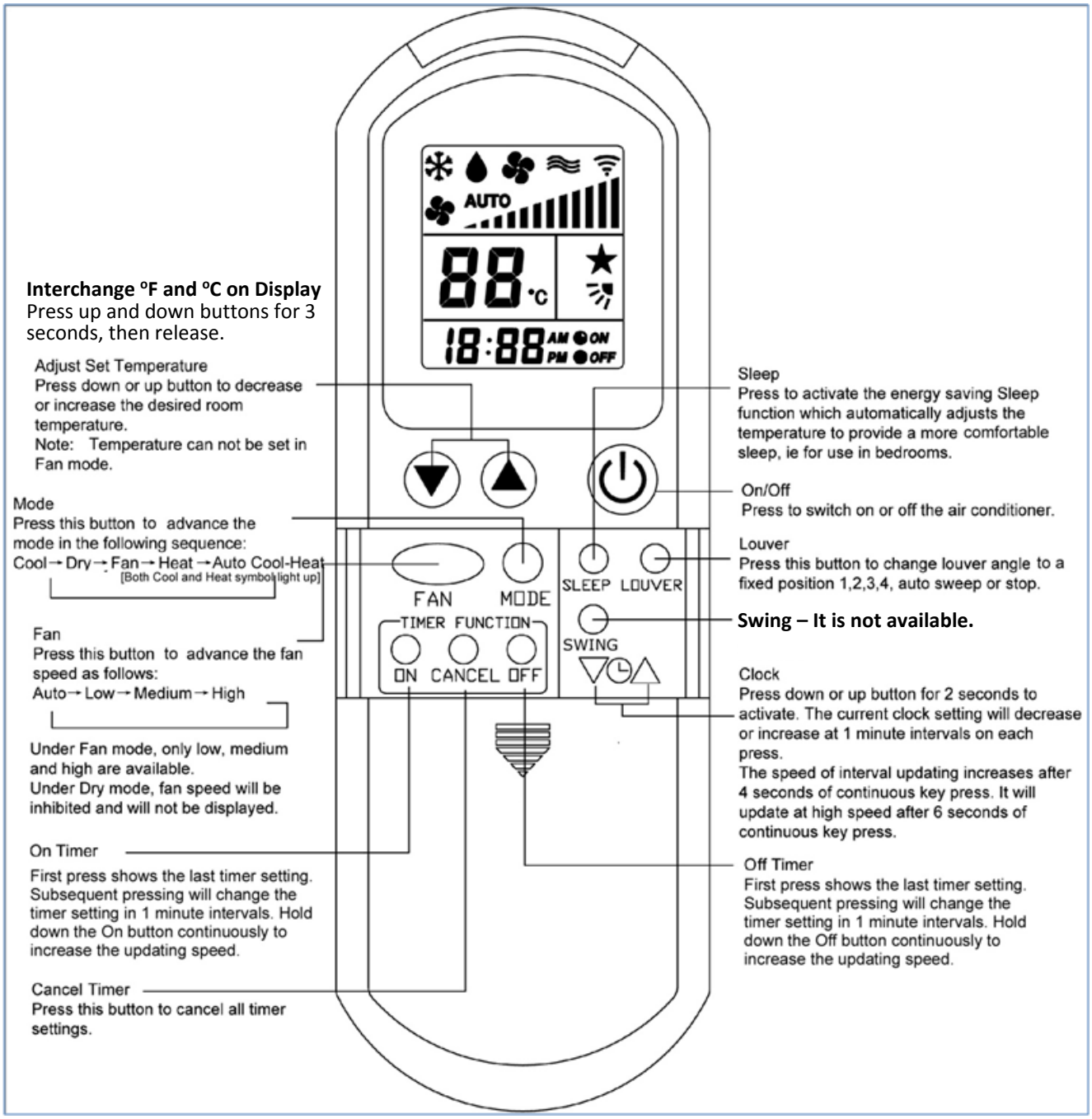

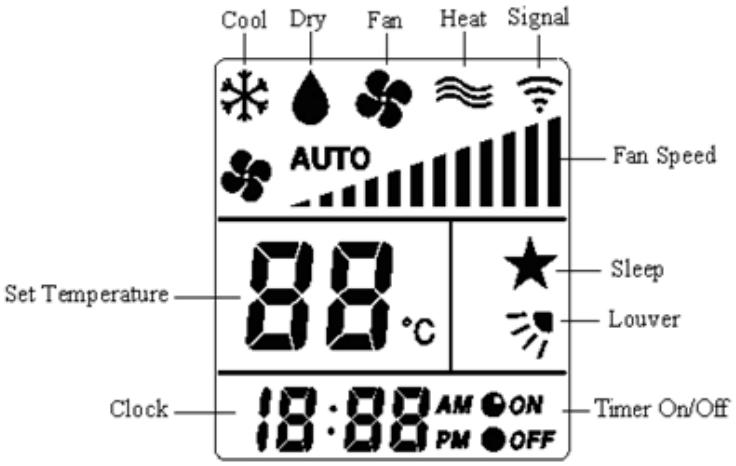

Attention

When unit with handset is the master unit, its settings are automatically sent to the slave units;
Auto Cool-Heat operation will be applicable in 4-pipe system only.

"Swing" function is not applicable.
European version only uses degree C setting.

G.2. Wired Wall Pad Controller

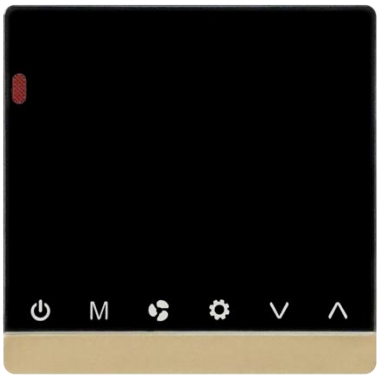

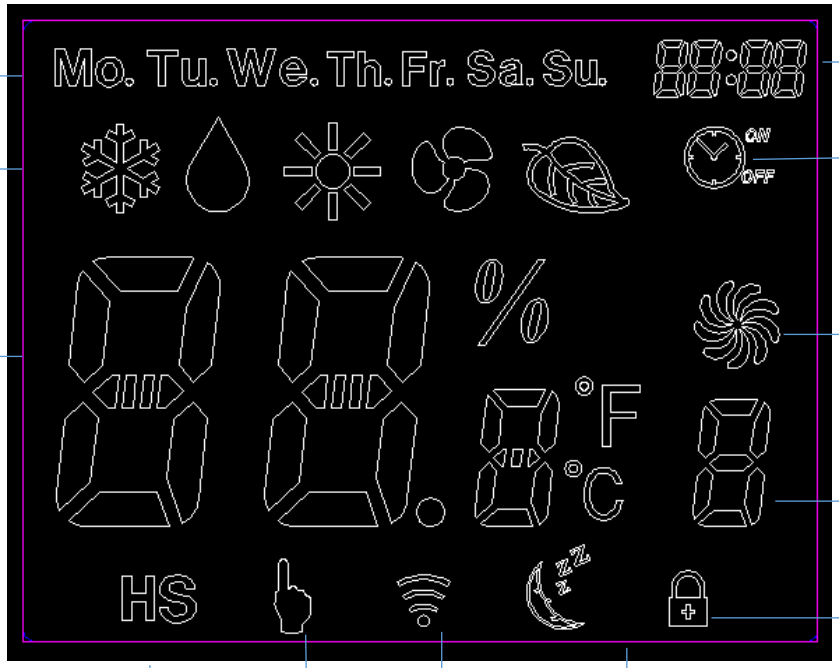

Day display

Mode display

Temperature display

Real Time display

Timer display

Fan speed display

Master-Slave

Button display

Network icon

Sleep icon

Key lock

1. Buttons function

Button						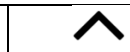
Name	ONOFF	MODE	FAN	SET	DOWN	UP
Function	Switch on or off the unit	Switch between modes	Change Fan Speed	Switch interfaces	Modify parameters	Modify parameters

Press to change function setting: (CNT stands for pressing times)

（1） CNT=0：No function
（2） CNT=1：Real time setting
（3） CNT=2：Timer On/Off setting
（4） CNT=3：Sleep or swing settings
（5） CNT=4：Network control (Single control) mode setting
（6） CNT=5：Global control
（7） CNT=6：Parameters checking

2. Real time setting

":" blinks for every second when real time is shown. Press once to enter Real Time setting interface. When ":" is on, then press or to adjust the current time. Press to adjust date. Press to adjust hour or minute.

Press to confirm settings and exit. If no operation within 6 seconds, it will automatically exit and the setting will not be saved.

3. Time On/Off setting

If the master unit is in global control mode and the ON/OFF timer setting is selected, the master unit will command the whole network to be ON or OFF. Otherwise, the ON/OFF timer affects the local unit only. The system supports ON/OFF timer settings for each day of the week.

Press twice to enter Timer setting interface and timer icon is on. When "ON" blinks, press to set timer date (from Monday to Sunday). Press to set hour and minute of timer-on or timer-off alternately. "ON" blinks when timer is set to on and "OFF" blinks when timer is set to off. Press or to set timer on/off time.

Press to confirm settings and exit. If no operation within 6 seconds, it will automatically exit and the setting will not be saved. Timer on/off icon is on when timer on/off is set on that day.

4. Swing or Sleep setting

Press three times to enter Swing or Sleep setting interface and key lock icon blinks. Press to turn the sleep function on or off. Sleep icon is on or off when sleep function is turned on or off.

Press to turn on or off the swing function. is on when swing function is on.

Press to select room sensor in the wall pad or in the unit. If "∩" is shown in the area of fan speed display, the senor in the wall pad is selected. If "F" is shown in the area of fan speed display, the senor in the unit is selected.

Press to confirm settings and exit. If no operation within 6 seconds, it will automatically exit and the setting will not be saved.

5. Temperature setting

Press or to set temperature. Set point temperature is shown on temperature display area.

Press to confirm settings and exit. If no operation within 6 seconds, it will automatically exit and the setting will not be saved.

When DIP SW1=ON, set point temperature is fixed. In cooling mode, set point temperature is 24℃. In heating mode, set point temperature is 21℃.

When DIP SW1=OFF, temperature can be set from 16℃ to 30℃.

When DIP SW2=ON, set point temperature is shown on temperature display area.

When DIP SW2=OFF, room temperature is shown on temperature display area.

6. Mode setting

Press to set COOL, HEAT, FAN or DRY mode alternatively.

7. Key Lock

Press and to set key lock function. Key lock icon is on or off when key lock function is set to on or off.

8. Fan speed setting

Press to set LOW, MEDIUM, HIGH or AUTO speed.

9. ON/OFF setting

Press to turn on or off the unit.

10. Temperature unit setting

Press and at the same time to change temperature unit between Celsius and Fahrenheit.

11. Network control (Only master unit can control slave units)

Press four times to set network control and “Network” icon is on. The slave unit number is blinking in real time display area.

Press or to select slave unit which is online. The offline slave unit number is not shown.

Press to select parameters: ON/OFF unit, temperature, mode, fan speed, swing and sleep.

Press to set the selected parameter.

1)ON/OFF unit: Press button once, “H” blinks in master-slave display area, then press to turn on unit (“H” blinks) or turn OFF unit (“S” blinks).

2)Temperature: Press twice, temperature blinks in temperature display area, then press or to set temperature.

3)Mode: Press three times, Mode icon blinks in mode display area, then press to select mode.

4)FAN SPEED: Press four times, fan speed icon blinks in fan speed display area, then press to set fan speed.

5)Sleep: Press five times, sleep icon blinks then press to set sleep mode.

Press to confirm settings and exit. If no operation within 6 seconds, it will automatically exit and the setting will not be saved.

12. Global control setting

Press five times to set global control and “Network” icon blinks.

1) Press , timer on/off icon blinks and all slave units’ timer on/off function setting are cancelled.

2) Press , all slave units time are set to the same as master units.

Press , master unit sends commands to all online slave units. “Network” icon is off. If timer on/off function is set on mater unit, “Network” icon blinks until Timer on/off disappears.

13. Parameter checking

Press six times to enter parameter checking interface. Local unit parameter is shown in temperature display area. Unit number is shown in real time hour area and parameter number is shown in real time minute area. For example, 2:03 stands for No.2 unit and No.3 parameter. Press and to select the specific parameter. Press and to select unit number. Press to exit parameter checking interface.

Parameters shown below:

Temp. area	Time area
C0	Return air temperature
C1	Indoor coil 1 temperature
C2	DIP switch setting
C3	Indoor coil 2 temperature

14. Error codes

When unit error is detected, unit number blinks on real time hour area and Error code blinks on real time minute area. The Error codes display alternately if more than one error is detected.

If there is no slave unit online, only error code is shown in real time minute area.

Error code table:

Error reason	Error code
Indoor coil sensor 2 faulty	E2
Return air sensor faulty	E3
Indoor coil sensor 1 faulty	E4
Indoor coil low temperature protection	E5
Indoor coil over heat protection	E6
Water pump faulty	E7
Local communication error	EC0

15. EC motor RPM setting (Not available in AC motor unit)

DIP SW3 is used to set EC motor RPM.

When DIP SW3=ON, wired wall pad enters setting interface. D1/D2/D3 is shown in temperature display area and EC motor RPM is shown in real time display area.

Press and to select motor speed (D1, D2 or D3). Press or to set EC motor RPM. After 3 seconds, the setting is valid.

When DIP SW3=OFF, wired wall pad resumes normal operation.

H. Sensor Resistance R-T Conversion Table

Resistance: R (25°C) = 10KΩ ± 1%
Beta Constant: B (25/85) = 3977 ± 1%

T	Rmin	Rnom	Rmax	T	Rmin	Rnom	Rmax
(°C)	(KΩ)	(KΩ)	(KΩ)	(°C)	(KΩ)	(KΩ)	(KΩ)
-30	174	182.7	191.8	4	26.11	26.9	27.71
-29	163.4	171.5	179.9	5	24.85	25.59	26.34
-28	153.6	161.1	168.9	6	23.65	24.35	25.05
-27	144.4	151.3	158.5	7	22.52	23.17	23.83
-26	135.8	142.2	148.9	8	21.45	22.06	22.68
-25	127.8	133.8	140	9	20.44	21.01	21.59
-24	120.3	125.8	131.6	10	19.48	20.02	20.55
-23	113.3	118.4	123.8	11	18.58	19.7	19.58
-22	106.7	111.5	116.5	12	17.71	18.18	18.65
-21	100.6	105.1	109.7	13	16.9	17.33	17.77
-20	94.9	99.03	103.3	14	16.12	16.53	16.94
-19	89.51	93.39	97.41	15	15.39	15.77	16.16
-18	84.5	88.11	91.85	16	14.69	15.05	15.41
-17	79.8	83.17	86.64	17	14.03	14.37	14.7
-16	75.39	78.53	81.76	18	13.41	13.72	14.03
-15	71.26	74.18	77.19	19	12.81	13.1	13.4
-14	67.37	70.1	72.9	20	12.24	12.52	12.79
-13	63.73	66.26	68.88	21	11.7	11.96	12.22
-12	60.3	62.67	65.1	22	11.19	11.43	11.67
-11	57.08	59.28	61.55	23	10.71	10.93	11.15
-10	54.05	56.1	58.22	24	10.24	10.45	10.66
-9	51.19	53.12	55.08	25	9.8	10	10.2
-8	48.51	50.3	52.14	26	9.374	9.57	9.765
-7	45.98	47.66	49.37	27	8.969	9.16	9.351
-6	43.61	45.17	46.77	28	8.584	8.77	8.957
-5	41.36	42.82	44.31	29	8.218	8.4	8.582
-4	39.25	40.61	42	30	7.869	8.047	8.225
-3	37.26	38.53	39.83	31	7.537	7.71	7.885
-2	35.38	36.56	37.78	32	7.221	7.39	7.56
-1	33.6	34.71	35.85	33	6.92	7.085	7.251
0	31.93	32.97	3402	34	6.633	6.794	6.956
1	30.35	31.32	32.3	35	6.36	6.517	6.675
2	28.85	29.76	30.68	36	6.099	6.252	6.407
3	27.44	28.29	29.15	37	5.85	6	6.151

Resistance: R (25°C) = 10KΩ ± 1%
Beta Constant: B (25/85) = 3977 ± 1%

T	Rmin	Rnom	Rmax	T	Rmin	Rnom	Rmax
(°C)	(KΩ)	(KΩ)	(KΩ)	(°C)	(KΩ)	(KΩ)	(KΩ)
38	5.614	5.759	5.907	75	1.417	1.474	1.532
39	5.387	5.53	5.673	76	1.37	1.426	1.482
40	5.172	5.31	5.451	77	1.326	1.379	1.434
41	4.966	5.101	5.238	78	1.282	1.335	1.389
42	4.769	4.901	5.034	79	1.241	1.292	1.344
43	4.582	4.71	4.84	80	1.201	1.25	1.302
44	4.402	4.527	4.654	81	1.162	1.211	1.261
45	4.231	4.353	4.477	82	1.125	1.172	1.221
46	4.067	4.186	4.307	83	1.089	1.135	1.183
47	3.911	4.027	4.144	84	1.055	1.1	1.146
48	3.761	3.874	3.989	85	1.021	1.065	1.111
49	3.618	3.728	3.84	86	0.9891	1.032	1.077
50	3.481	3.588	3.697	87	0.9582	1	1.044
51	3.35	3.454	3.561	88	0.9284	0.9697	1.012
52	3.225	3.326	3.43	89	0.8998	0.9401	0.9818
53	3.105	3.204	3.305	90	0.8721	0.9115	0.9522
54	2.99	3.086	3.185	91	0.8455	0.8839	0.9237
55	2.88	2.974	3.07	92	0.8198	0.8573	0.8961
56	2.774	2.866	2.959	93	0.795	0.8316	0.8696
57	2.673	2.762	2.854	94	0.7711	0.8069	0.8439
58	2.576	2.663	2.752	95	0.748	0.783	0.8192
59	2.483	2.568	2.655	96	0.7258	0.7599	0.7953
60	2.394	2.477	2.562	97	0.7043	0.7376	0.7722
61	2.309	2.39	2.472	98	0.6836	0.7161	0.7499
62	2.227	2.306	2.386	99	0.6635	0.6953	0.7283
63	2.149	2.225	2.304	100	0.6442	0.6752	0.7075
64	2.073	2.148	2.224	101	0.6255	0.6558	0.6874
65	2.001	2.074	2.148	102	0.6075	0.6371	0.6679
66	1.931	2.002	2.075	103	0.59	0.619	0.6491
67	1.865	1.934	2.005	104	0.5732	0.6015	0.631
68	1.801	1.868	1.937	105	0.5569	0.5846	0.6134
69	1.739	1.805	1.872				
70	1.68	1.744	1.81				
71	1.623	1.686	1.75				
72	1.569	1.63	1.692				
73	1.516	1.576	1.637				
74	1.466	1.524	1.583				

I. **Troubleshooting**

Symptoms	Cause	Remedy
The fan coil does not start up	No voltage	- Check for presence of voltage - Check fuse on board
	Mains switch in the “OFF position	- Place in the “ON” position
	Faulty room control	- Check the room control
	Faulty fan	- Check fan motor
Insufficient output	Filter clogged	- Clean the filter
	Air flow obstructed	- Remove obstacles
	Room control regulation	- Check the room air sensor
	Incorrect water temperature	- Check the water source
	Air present	- Check the air vent
Noise and vibrations	Contact between metal parts	- Check for loosening parts
	Loose screws	- Tighten screws

daitsu

EUROFRED
being efficient

Eurofred S.A.
Marqués de Sentmenat 97
08029 Barcelona
www.eurofred.es